1 Exteriors 1

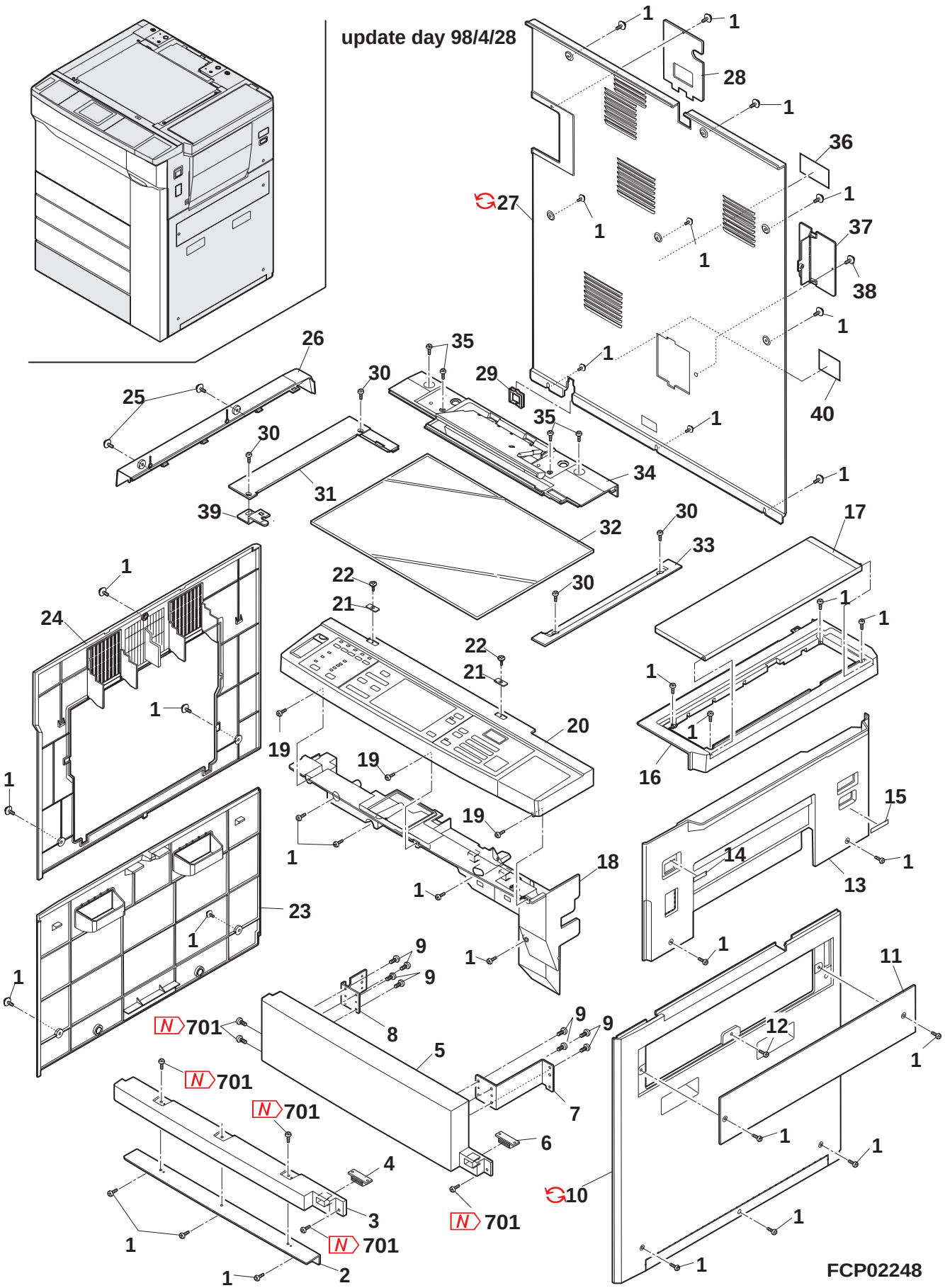

1 Exteriors 1

NO.	PARTS CODE	COMPATIBLE	PRICE RANK	NEW MARK	PART RANK	DESCRIPTION	TR NO.	VALID
1	XHBSE40P08000		AA		C	Screw (4×8)		
2	LPLTM4795FCZZ		AL		C	Front cover fixing plate (Japan only)		
3	PCŌVP1282FCZZ		AU		C	Front cover (Japan only)		
4	PMAGT0015FCZZ		AD		C	Magnet catch (10P)(Japan only)		
5	PCŌVP1283FCZZ		AY		C	Tray cover (Except Japan)		
6	PMAGT0015FCZZ		AD		C	Magnet catch (10P)(Except Japan)		
7	LPLTM4789FCZZ		AH		C	Tray fixing plate R (Except Japan)		
8	LPLTM4790FCZZ		AF		C	Tray fixing plate L (Except Japan)		
9	XEBSD40P10000		AA		C	Screw (4×10)(Except Japan)		
10	GCAB-0827FCZZ		BE		D	Right exterior lower		
	GCAB-0827FCZ2	3	BD		D	RIGHT EXTERIOR LOWER	DTE365	97/08/01
11	GCAB-0832FCZZ		AU		D	Right exterior center		
12	XHBSE40P08000		AA		C	Screw (4×8)		
13	GCAB-0887FCZ1		BA	N	D	Right exterior upper (Japan only)		
	GCAB-0887FCZZ		BA	N	D	Right exterior upper (Except Japan)		
14	TLABZ1840FCWZ		AB		C	Power mark label (Japan only)		
15	TLABZ4194FCZZ		AE	N	C	Heater switch label (Japan only)		
16	GCAB-0825FCZZ		AW		D	Upper right exterior		
17	CCŌVP1284FC01		AY		C	Toner cover (Japan only)		
	CCŌVP1284FC02		AY		C	Toner cover (U.S.A. only)		
	CCŌVP1284FC03		AY		C	Toner cover (Australia,New Zealand,U.Kingdom)		
	CCŌVP1284FC04		AY		C	Toner cover (CANADA,LAG2,3,4,Philippines,Indonesia,Thailand, Singapore,Malaysia,Sri Lanka,Hong Kong,Brazil,Taiwan)		
	CCŌVP1284FC05		AY		C	Toner cover (0ther countries)		
18	PCŌVP1286FCZ1		BA		C	Frame cover		
19	XEBSE40P10000		AA		C	Screw (4×10)		
20	CPNLC0224FC01		BA		D	Operation panel (Japan only)		
	CPNLC0224FC02		BA		D	Operation panel (Inch series)		
	CPNLC0224FC03		BA		D	Operation panel (Export‥AB series)		
21	LPLTM2573FCZ1		AD		C	ADF MG plate		
22	XBSSE30P10000		AA		C	Screw (3×10)		
23	GCAB-0830FCZZ		BC		D	Left exterior lower		
24	GCAB-0829FCZ1		BA	N	D	Left exterior upper		
25	XHBSE40P14000		AA		C	Screw (4×14)		
26	GCAB-0828FCZZ		AR		D	Upper left exterior		
27	GCAB-0831FCZ1		BE	N	D	Rear exterior		
	GCAB-0831FCZ4	1	BD		D	REAR EXTERIOR	SP2260	98/02/01
28	PCŌVP1285FCZ1		AK	N	C	Sorter connector cover		
29	LHLDW1152FCZZ		AC		C	Bush (EH-14)		
30	XBTSE40P04000		AA		C	Screw (4×4)		
31	CGiDM1780FC01		AU	N	C	OR guide L (Japan only)		
	CGiDM1780FC03		AU	N	C	OR guide L (Inch series)		
	CGiDM1780FC02		AU	N	C	OR guide L (Export‥AB series)		
32	PGLSP0074FCZ6		BN		B	Table glass		
33	PGiDM1337FCZZ		AK		C	OR guide R		
34	GCAB-0748FCZ3		AU		D	Upper exterior rear		
35	XHBSE40P10000		AA		C	Screw (4×10)		
	☆ XHBSE40P10000		AC		C	SCREW(Q'TY:+3)	-	
	☆ XHBSE40P10000	1	AC		C	SCREW(Q'TY:-3)	SP2233	97/11/01
36	TCAUH0918FCZZ		AA		C	Service caution label (Australia,New Zealand)		
	TCAUH1028FCZZ		AC		C	Service caution label (USA,CANADA)		
	TCAUA0766FCZZ		AB		C	Service caution label (U.Kingdom only)		
	TCAUA0770FCZZ		AB		C	Service caution label (Export‥Other countries)		
37	PCŌVP1266FCZ2		AH		C	Rear exterior cover		
38	XHBSE30P06000		AA		C	Screw (3×6)		
39	LPLTM5355FCZZ		AE	N	C	Table glass earth plate		
40	TCAUH0933FCZZ		AB		C	High voltage caution label (U.Kingdom only)		
701	N XHTSE40P12000	1	AC	N		SCREW(Q'TY:+3)	SP2233	97/11/01

N :Add
:Change
:Delete
:Others

UpDate 98/06/23

2 Exteriors 2

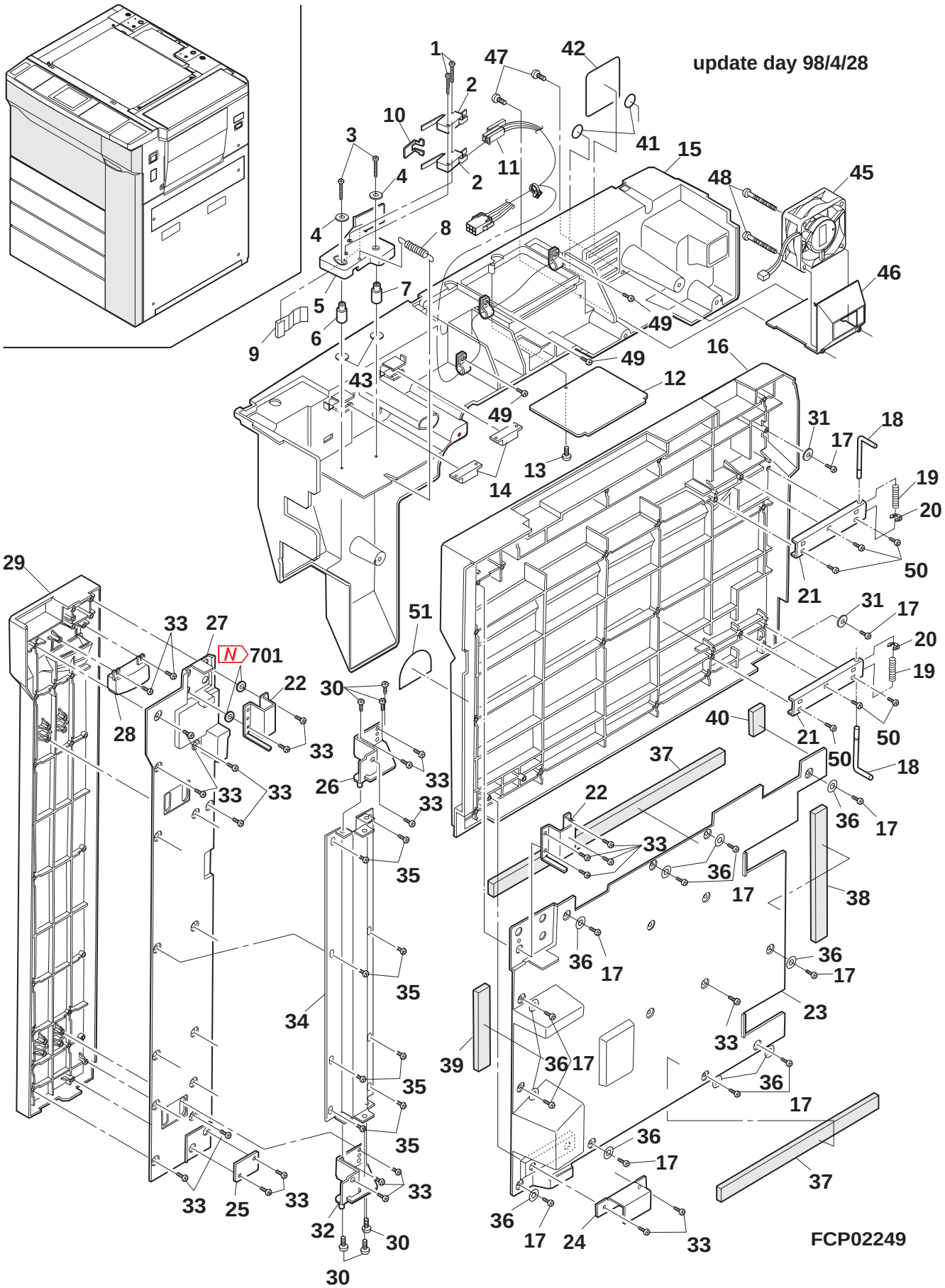

2 Exteriors 2

NO.	PARTS CODE	COMPATIBLE	PRICE RANK	NEW MARK	PART RANK	DESCRIPTION	TR NO.	VALID
1	XBPSD30P25000		AA		C	Screw (3×25)		
2	QSW-M0453FCZZ		AM		B	Door switch (Japan,100V series)		
	QSW-M0454FCZZ		AM		B	Door switch (200V series)		
3	XEBSD40P25000		AB		C	Screw (4×25)		
4	LX-WZ0086FCZZ		AA		C	PS brake washer		
5	CPLTP4370FC01		AK		C	Door switch fixing plate		
6	NSFTZ2217FCZZ		AH		C	Door switch shaft 2		
7	NSFTZ2216FCZZ		AG		C	Door switch shaft 1		
8	MSPRC2352FCZZ		AC		C	Door switch fixing spring		
9	MSPRP2167FCZZ		AE		C	Door switch spring		
10	MLEVF0209FCZZ		AD		C	DSW lever		
11	DHAi-2460FCZZ		AM		C	Lower op unit harness (Japan,100V series)		
	DHAi-2548FCZZ		AR		C	Lower op unit harness (200V series)		
12	PFTA-0112FCZZ		AN		C	Maintenance cover		
13	XEBSD30P08000		AA		C	Screw (3×8)		
14	PMAGT0015FCZZ		AD		C	Magnet catch (10P)		
15	PCŌVP1286FCZ1		BA		C	Frame cover		
16	CCAB-0823FC06		BF	N	D	Front exterior L (Japan only)		
	CCAB-0823FC07		BF	N	D	Front exterior L (Except Japan)		
17	LX-BZ0778FCZZ		AB		C	Screw		
18	NSFTZ2208FCZZ		AG		C	Front exterior hinge shaft		
19	MSPRC2339FCZZ		AC		C	Front exterior hinge spring		
20	XRESP40-05000		AA		C	E type ring (4E)		
21	LPLTM4784FCZZ		AH		C	Front exterior hinge fixing plate		
22	LPLTM4791FCZZ		AH		C	Front exterior L MG plate		
23	LPLTP4786FCZZ		AZ		C	Front exterior L reinforce plate		
24	LPLTM4181FCZZ		AD		C	Front exterior MG plate		
25	LPLTM4787FCZZ		AC		C	Front exterior R MG plate		
26	CPLTM4785FC01		AP		C	Front exterior hinge plate		
27	LPLTP4788FCZZ		AX		C	Front exterior R reinforce plate		
28	JHNDP0125FCZZ		AK		C	Front exterior right handle		
29	GCAB-0824FCZZ		BA		D	Front exterior right		
30	XHBSE40P08000		AA		C	Screw (4×8)		
31	LX-WZ0271FCZZ		AB		C	Washer		
32	CPLTM4785FC02		AQ		C	Front hinge plate lower		
33	XEBSE40P10000		AA		C	Screw (4×10)		
34	LSTYM0217FCZZ		AV		C	Front exterior right stay		
35	XEBSE40P14000		AA		C	Screw (4×14)		
36	LX-WZ0423FCZZ		AC		C	Washer		
37	PMLT-1030FCZZ		AE		C	Front exterior left cushion A		
38	PMLT-1016FCZZ		AD		C	Front exterior left cushion B		
39	PMLT-1017FCZZ		AC		C	Front exterior left cushion C		
40	PMLT-1020FCZZ		AC		C	Front exterior left cushion D		
41	PSHEZ3997FCZZ		AB		C	Sheet (Japan,100V series)		
42	PSHEZ3998FCZZ		AE		C	Frame cover sheet (Japan,100V series)		
43	LX-WZ0144FCZZ		AA		C	Washer		
45	RMŌTE0630FCZZ		AW		B	Main motor (cooling) (200V series)		
46	PDUC-0105FCZZ		AK		D	CFM2 duct (200V series)		
47	XEBSE40P12000		AA		C	Screw (4×12)(200V series)		
48	XEPSD40P35000		AA		C	Screw (4×35)(200V series)		
49	XEBSD30P08000		AA		C	Screw (3×8)(200V series)		
50	XBPSF40P10KS0		AA		C	Screw		
51	TLABZ3903FCZZ		AF		C	Label (U.S.A.,Japan)		
701	N PSHEP4577FCZZ	6	AC	N		MG CATCH MYLAR(FROM 1ST LOT)	SP2260	

3 Original cover·· Standard some areas

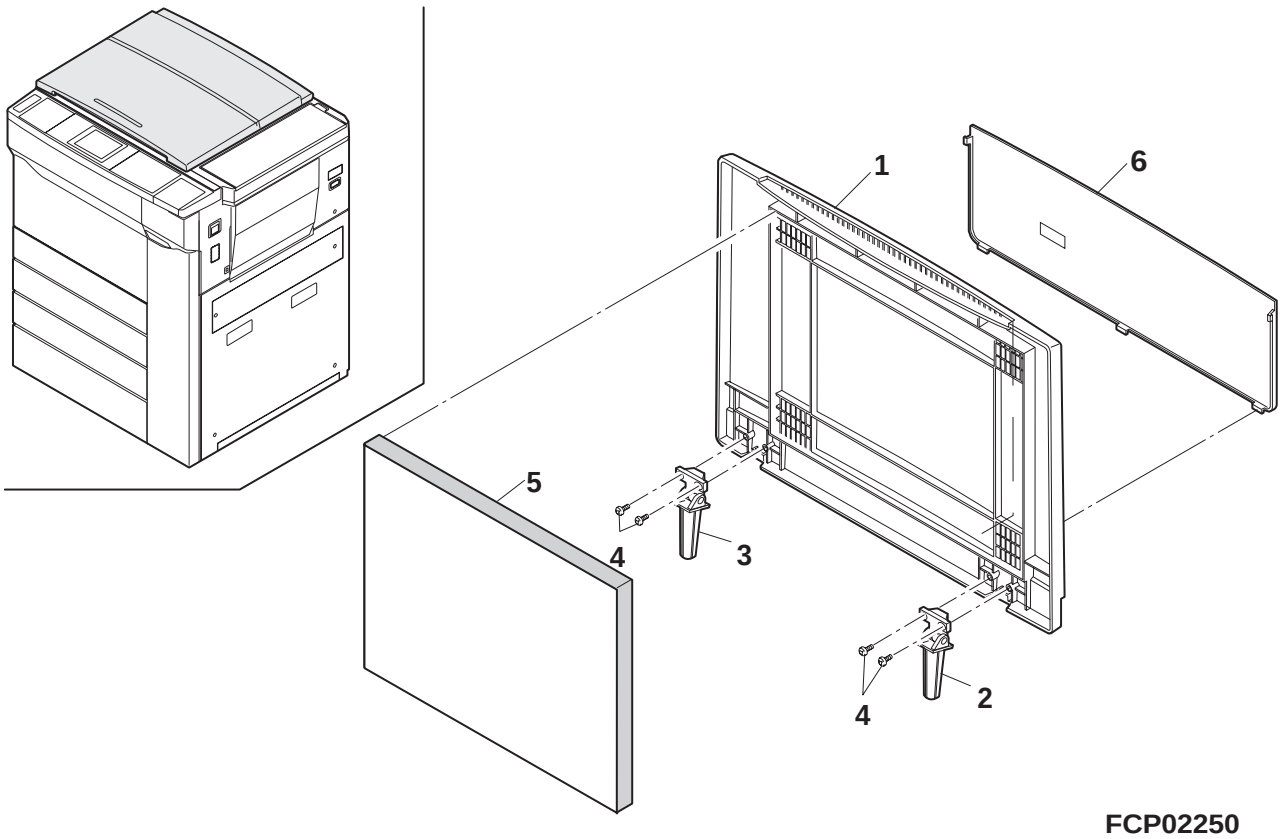

3 Original cover·· Standard some areas

NO.	PARTS CODE	COMPATIBLE	PRICE RANK	NEW MARK	PART RANK	DESCRIPTION	TR NO.	VALID
1	GCOVH0206FCZZ		BA		D	OC cover		
2	MHNG-0096FCZZ		AL		C	OC hinge R		
3	MHNG-0086FCZZ		AL		C	OC hinge L		
4	XJBSD40P12000		AA		C	Screw (4×12)		
5	PSHEZ2715FCZZ		AU		D	OC sheet		
6	PSTK-0015FCZZ		AQ		C	Original stocker		

4 Rear exterior upper

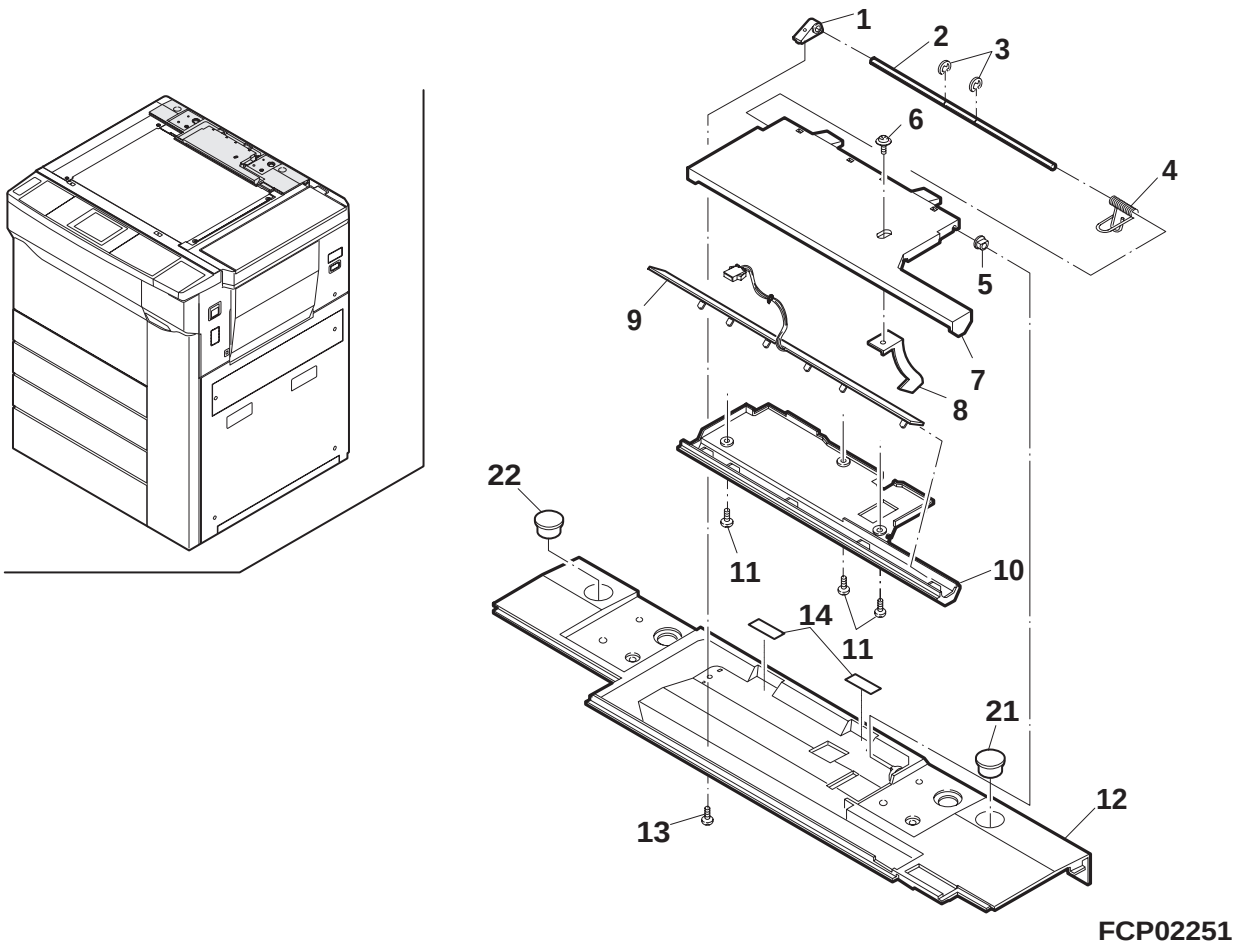

4 Rear exterior upper

NO.	PARTS CODE	COMPATIBLE	PRICE RANK	NEW MARK	PART RANK	DESCRIPTION	TR NO.	VALID
1	LHLDZ1085FCZZ		AD		C	Original detection fulcrum holder		
2	NSFTZ1805FCZZ		AE		C	Original detection fulcrum shaft		
3	XRESP30-04000		AA		C	E type ring (3mm)		
4	MSPRT1563FCZZ		AC		C	Original detection spring		
5	LBSHZ1102CCZZ		AC		C	Bushing 1		
6	XBPSD30P06KS0		AA		C	Screw (3×6KS)		
7	MARMP0147FCZZ		AK		C	Original detection arm upper		
8	PSLDH0178FCZZ		AD		C	Original detection shield plate		
9	CPWBF0934FC31		AX		E	ORS emission PWB (Japan,Taiwan)		
	CPWBF0934FC32		AX		E	ORS emission PWB (Except Japan,Taiwan)		
10	MARMP0148FCZZ		AH		C	Original detection arm lower		
11	XEPSD30P05000		AA		C	Screw (3×5)		
12	GCAB-0748FCZ3		AU		D	Upper exterior rear		
13	XEPSD30P06000		AA		C	Screw (3×6)		
14	PSHEZ3879FCZZ		AC		C	Original detection sheet H		
21	PCÖVP0911FCZZ		AB		D	Upper exterior rear cover R		
22	PCÖVP0941FCZZ		AB		D	Upper exterior rear cover L		

5 Operation panel

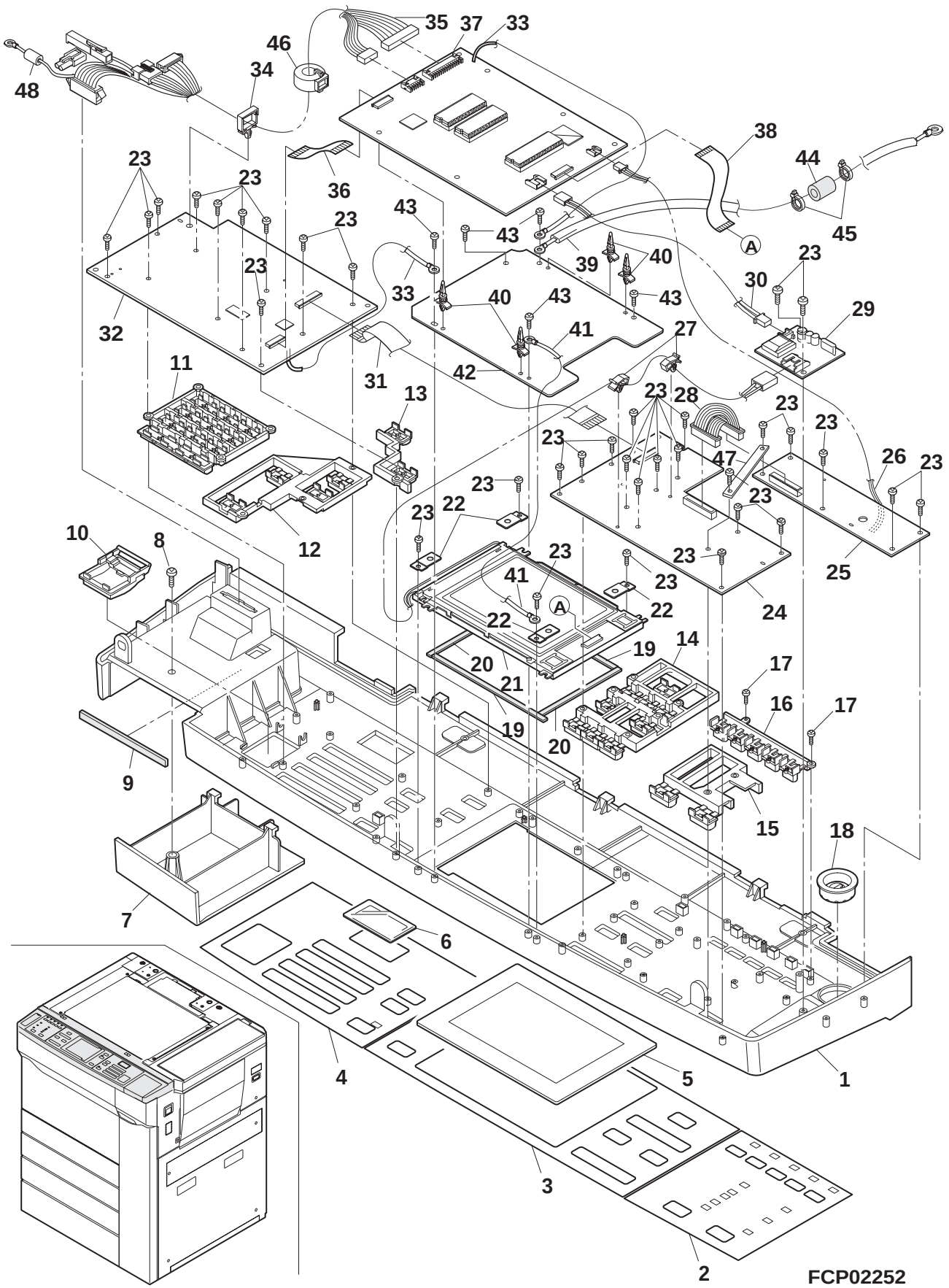

5 Operation panel

NO.	PARTS CODE	COMPATIBLE	PRICE RANK	NEW MARK	PART RANK	DESCRIPTION	TR NO.	VALID
1	CPNLC0224FC01		BA		D	Operation panel (Japan only)		
	CPNLC0224FC02		BA		D	Operation panel (Inch series)		
	CPNLC0224FC03		BA		D	Operation panel (Export·· AB series)		
2	CiNDP0532FC10		AT	N	D	Panel sheet L (Japanese)		
	CiNDP0532FC02		AV		D	Panel sheet L (English)(U,Kingdom only)		
	CiNDP0532FC11		AT	N	D	Panel sheet L (English)(Except U,Kingdom)		
	CiNDP0532FC12		AT	N	D	Panel sheet L (German)		
	CiNDP0532FC13		AT	N	D	Panel sheet L (French)		
	CiNDP0532FC14		AT	N	D	Panel sheet L (Spanish)		
	CiNDP0532FC15		AT	N	D	Panel sheet L (Italian)		
	CiNDP0532FC16		AT	N	D	Panel sheet L (Dutch)		
3	CiNDP0533FC10		AX	N	D	Panel sheet C (Japanese)		
	CiNDP0533FC18		AX	N	D	Panel sheet C (English)(U,Kingdom only)		
	CiNDP0533FC11		AX	N	D	Panel sheet C (English)(Except U,Kingdom)		
	CiNDP0533FC12		AX	N	D	Panel sheet C (German)		
	CiNDP0533FC13		AX	N	D	Panel sheet C (French)		
	CiNDP0533FC14		AX	N	D	Panel sheet C (Spanish)		
	CiNDP0533FC15		AX	N	D	Panel sheet C (Italian)		
	CiNDP0533FC16		AX	N	D	Panel sheet C (Dutch)		
4	CiNDP0534FC10		AV	N	D	Panel sheet R (Japanese)		
	CiNDP0534FC02		AW	N	D	Panel sheet R (English)(U,Kingdom only)		
	CiNDP0534FC11		AV	N	D	Panel sheet R (English)(Except U,Kingdom)		
	CiNDP0534FC12		AV	N	D	Panel sheet R (German)		
	CiNDP0534FC13		AV	N	D	Panel sheet R (French)		
	CiNDP0534FC14		AV	N	D	Panel sheet R (Spanish)		
	CiNDP0534FC15		AV	N	D	Panel sheet R (Italian)		
	CiNDP0534FC16		AV	N	D	Panel sheet R (Dutch)		
5	CFiLW0193FC02		AZ		B	Operation filter A (U,Kingdom only)		
	CFiLW0193FC06		AY	N	B	Operation filter A (Except U,Kingdom)		
6	PFiLW0227FCZZ		AH		B	Operation filter (Except SEEG)		
7	PFTA-0111FCZZ		AM		D	Cover		
8	XBPSD40P08000		AA		C	Screw (4×8)		
9	PMLT-0904FCZZ		AB		C	Cushion C		
10	CBTN-0157FC32		AH		E	Copy key unit		
11	CBTN-0206FC03		AP		C	Ten key (U,Kingdom only)		
	CBTN-0206FC06		AP	N	C	Ten key (Except U,Kingdom)		
12	CBTN-0175FC03		AG		C	Program key (U,Kingdom only)		
	CBTN-0175FC05		AL		C	Program key (Except U,Kingdom)		
13	CBTN-0208FC01		AL		C	Clear all key		
14	CBTN-0207FC01		AN		C	Zoom key (U,Kingdom only)		
	CBTN-0207FC03		AP		C	Zoom key (Except U,Kingdom)		
15	JBTN-0161FCZ2		AG		C	Sorter key (U,Kingdom only)		
	JBTN-0161FCZ4		AG	N	C	Sorter key (Except U,Kingdom)		
16	JBTN-0168FCZZ		AB		C	Light gray Key (U,Kingdom only)		
	JBTN-0168FCZ2		AF	N	C	Light gray key (Except U,Kingdom)		
17	XEPSD20P05000		AA		C	Screw (2×5)		
18	JKNBP0127FCZZ		AE		C	LCD adjusting knob		
19	PMLT-0909FCZZ		AB		C	LCD cushion A		
20	PMLT-0907FCZZ		AB		C	LCD cushion C		
21	VVLLM320102-1		CA		B	LCD (LM320102)		
22	LPLTM4419FCZZ		AB		C	Liquid crystal fixing plate A		
23	XEBSD30P08000		AA		C	Screw (3×8)		
24	CPWBF1102FC52		BF		E	Operation 2 PWB		
25	CPWBF1103FC51		BA		E	Operation 3 PWB		
26	DHAi-2426FCZZ		AF		C	LCD VR harness		
27	LHLDW1013FCZZ		AB		C	Clamp holder (YMC-10)		
28	DHAi-2462FCZZ		AL		C	Operation 2, 3 PWB harness		
29	CPWBF1107FC51		BC		E	Inverter PWB		
30	DHAi-2464FCZZ		AF		C	Inverter harness		
31	DHAi-2463FCZZ		AG		C	Operation 1, 2 flat harness		
32	CPWBF1101FC51		BN		E	Operation 1 PWB		
33	DHAi-2499FCZZ		AF		C	OP earth harness		
34	LHLDW1265FCZZ		AC		C	Wire holder (PLWS-2)		
35	DHAi-2458FCZZ		AZ		C	Upper op unit harness		
36	DHAi-2465FCZZ		AD		C	Operation control harness		
37	CPWBN1241FC51		CA	N	E	Operation control PWB (Japanese)		
	CPWBN1241FC52		CA	N	E	Operation control PWB (English)		
	CPWBN1241FC53		CA	N	E	Operation control PWB (German)		
	CPWBN1241FC54		CA	N	E	Operation control PWB (Spanish)		
	CPWBN1241FC55		CA	N	E	Operation control PWB (French)		
38	DHAi-2461FCZZ		AE		C	LCD flat harness		
39	DHAi-2500FCZZ		AK		C	Frame earth harness		
40	LSUPP0103FCZZ		AB		C	PWB supporter (MSPLS4U)		
41	DHAi-2498FCZZ		AF		C	LCD earth harness		
42	PCŌVP1287FCZZ		AF		C	LCD cover		
43	XEBSD30P08000		AA		C	Screw (3×8)		
44	RCŌRF1034LCZZ		AG		C	Core		
45	LBNDJ0013FCZ1		AA		C	Wire band		
46	RCŌRF0018FCZZ		AP		C	Core (Except Japan,U.S.A.,CANADA,Pakistan,Philippines		

5 Operation panel

NO.	PARTS CODE	COMPATIBLE	PRICE RANK	NEW MARK	PART RANK	DESCRIPTION	TR NO.	VALID
47	PCÕVP1336FCZZ		AC		C	OP harness cover (Except Japan,CANADA)		
48	RCÕRF6661RCZZ		AK		C	Core (SFC-4)		

6 Optical unit 1

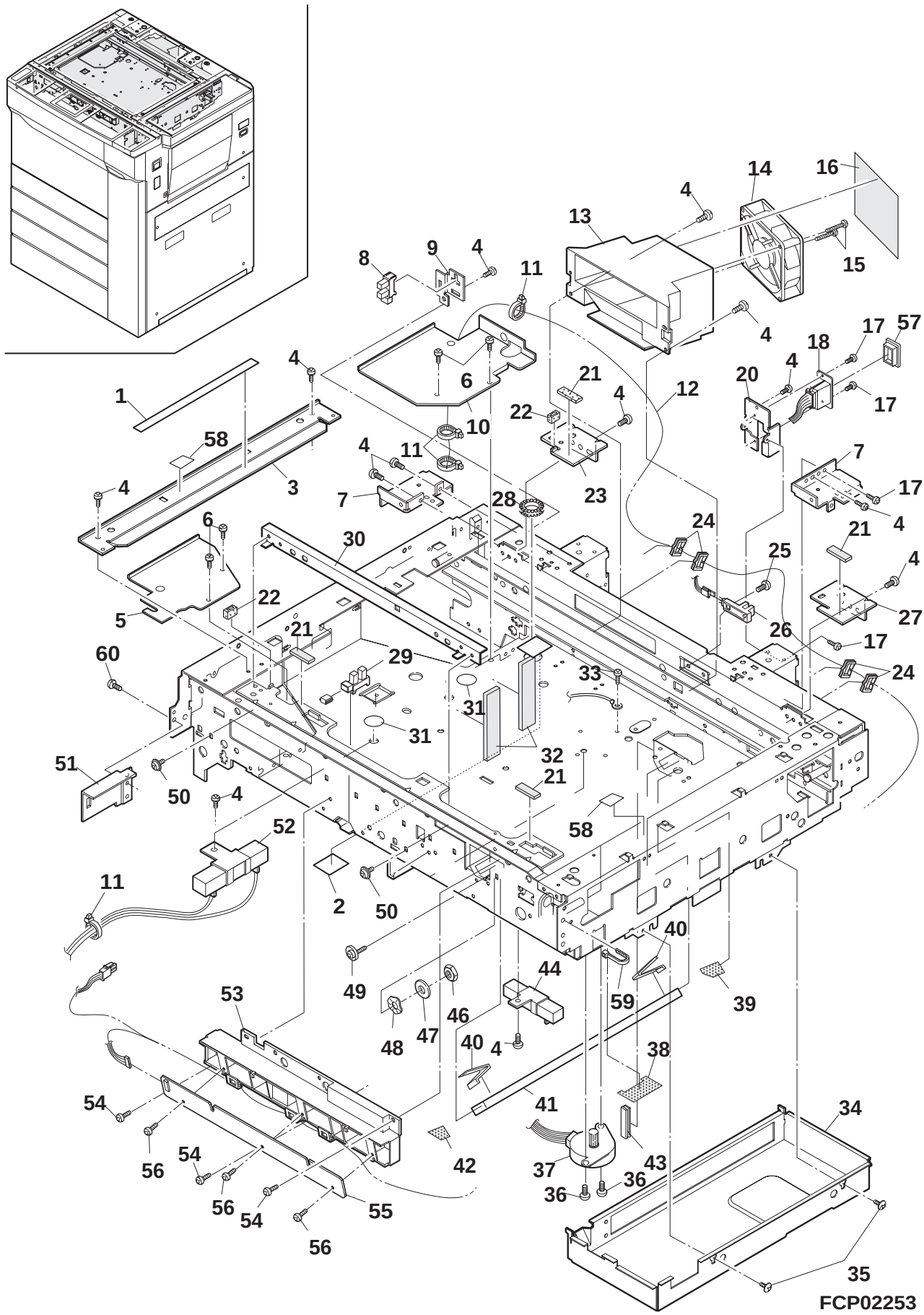

6 Optical unit 1

NO.	PARTS CODE	COMPATIBLE	PRICE RANK	NEW MARK	PART RANK	DESCRIPTION	TR NO.	VALID
1	TCAUH1002FCZZ		AH		C	Copy lamp caution label (USA,CANADA)		
2	PSHEP4133FCZZ		AC		C	CL lead protect sheet		
3	CPLTM5369FC01		AN	N	C	Tip sheet fixing plate		
4	XBPSD40P06K00		AA		C	Screw (4×6K)		
5	PSLD-0173FCZ1		AG		C	Fan shield F		
6	XBTSE40P06000		AA		C	Screw (4×6)		
7	LPLTM4840FCZZ		AG		C	Rear exterior fixing plate		
8	VHPGP3A39//-1		AH		B	Photo transistor (GP3A39)		
9	LPLTM4052FCZZ		AB		C	MHP fixing plate		
10	PSLD-0174FCZ1		AG		C	Fan shield R		
11	LBNDJ0014FCZZ		AB		C	Wire band (Small)		
12	DHAi-2435FCZZ		AZ		C	Optical main harness		
13	PDUC-0061FCZZ		AM		C	CFM duct		
14	RMŌTE0630FCZZ		AW		B	Main motor (cooling)		
15	XEPSD40P30000		AA		C	Screw (4×30)		
16	PFiLD0205FCZZ		AM		C	Fan filter		
17	XBPSD30P08KS0		AA		C	Screw (3×8KS)		
18	DHAi-2789FC12		BT	N	C	Main harness L (Japan only)		
	DHAi-2790FC12		BS	N	C	Main harness L (100V series)		
	DHAi-2796FC12		BT	N	C	Main harness L (200V series)		
20	LPLTM4901FCZZ		AK		C	RADF connector fixing plate		
21	PGUMS0228FCZZ		AA		C	Table glass rubber		
22	PGUMS0147FCZZ		AA		C	Table glass rubber (small)		
23	LPLTM4047FCZZ		AD		C	Glass holding plate L		
24	PHŌG-0385FCZZ		AB		C	Harness clamp		
25	XBBSD40P10000		AA		C	Screw (4×10)		
26	VHPGP1A22LC-1		AK		B	Photo sensor (GP1A22LC)(MHPD)		
27	LPLTM4046FCZZ		AD		C	Glass holding plate R		
28	LBSHC0247FCZZ		AB		C	Bushing (SG-12)		
29	VHPGP1A71A1-1		AG		B	Photo sensor (GP1A71A1)		
30	LRALM0101FCZ2		AL		C	MB-B rail		
31	PSHEP3938FCZZ		AC		C	Shield seal		
32	PCUSS0276FCZZ		AC		C	MB cushion		
33	XBPBZ40P06000		AA		C	Screw (4×6)		
34	CCŌVP1132FC33		AY		E	Dark box lower unit		
35	XBTSF40P06000		AA		C	Screw (4×6)		
36	XBPSD30P04K00		AA		C	Screw (3×4K)		
37	RMŌTP0696FCZZ		AV		B	Lens motor		
38	PSHEZ3142FCZZ		AB		C	6th mirror shield sheet		
39	PSHEZ3183FCZZ		AA		C	Reflector sheet R		
40	LFiX-0320FCZZ		AB		C	6th mirror fixing plate		
41	PMiR-0138FCZZ		AT		B	6th mirror		
42	PSHEZ3182FCZZ		AA		C	Reflector sheet F		
43	PHŌG-7004SCZZ		AD		C	Protector (20mm)		
⚠ 44	CR-WZ0242FC12		AY		B	Dry heater (Japan,Taiwan)		
46	XNESD40-32000		AA		C	Nut (φ4)		
47	XWHSD40-08000		AA		C	Washer (φ4)		
48	LX-WZ0050FCZ1		AA		C	Washer (φ4)		
49	LX-BZ0637FCZZ		AC		C	Screw (Red)		
50	LX-BZ0335FCZZ		AA		C	Screw (4×6)(Red)		
51	LPLTM4153FCZ1		AF		C	Papel support plate		
⚠ 52	CR-WZ0417FC02		AU		B	Dry heater (Japan,Taiwan)		
⚠	CR-WZ0464FC02		AX		B	Dry heater (200V series)		
53	LPLTP4025FCZZ		AK		C	ORS PWB fixing plate		
54	XBPSD40P06000		AA		C	Screw (4×6)		
55	CPWBF0935FC31		AX		E	ORS light receiving PWB (Japan,Taiwan)		
	CPWBF0935FC32		AX		E	ORS light receiving PWB (Other countries)		
56	XEPSD40P06000		AA		C	Screw (4×6)		
57	PFTA-0110FCZZ		AF		C	Connector cover (Except U.S.A.,CANADA,LAG2,3,4,Brazil,Thailand, Sri Lanka,Singapore,Malaysia,Indonesia,Hong Kong)		
58	TCAUH0933FCZZ		AB		C	High voltage caution label ((CANADA,200V series)		
59	LBNDJ0013FCZ1		AA		C	Wire band		
60	XHBSE40P08000		AA		C	Screw (4×8)		

N :Add
:Change
:Delete
:Others

UpDate 98/06/23

7 Optical unit 2

update day 98/6/3

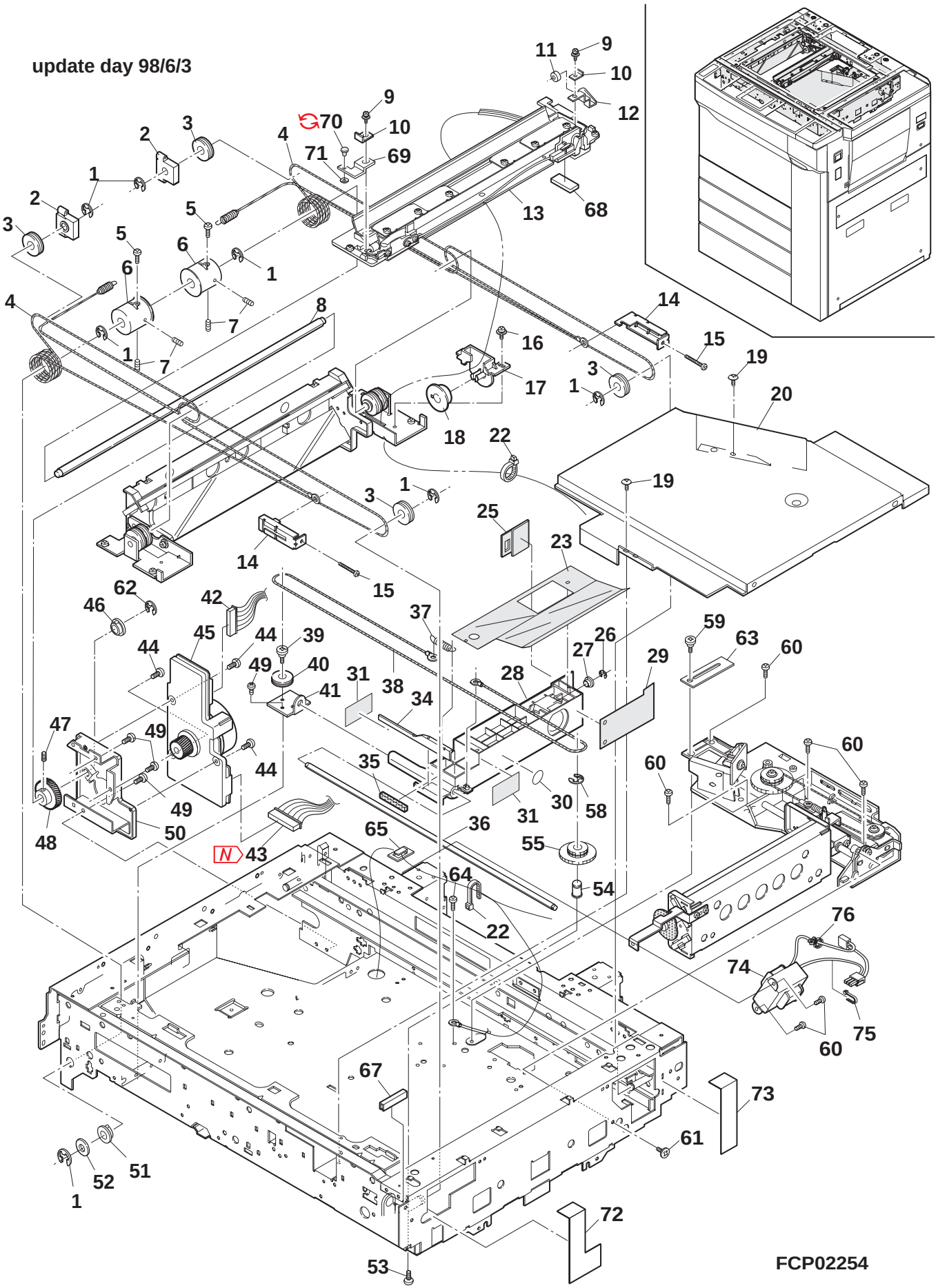

7 Optical unit 2

NO.	PARTS CODE	COMPATIBLE	PRICE RANK	NEW MARK	PART RANK	DESCRIPTION	TR NO.	VALID
1	XRESP70-08000		AA		C	E type ring (7mm)		
2	PGiDM1343FCZZ		AC		C	Wire guide		
3	NPLYZ0167FCZZ		AF		C	Pulley		
4	PWiR-0147FCZ1		AQ		C	MB drive wire		
5	LX-BZ0324FCZZ		AA		C	Screw (3×4)		
6	NPLYZ0172FCZ1		AL		C	Winder pulley		
7	LX-BZ0049FCZZ		AB		C	Screw (4×6)		
8	NSFTZ2166FCZZ		AW		C	Winder drive shaft		
9	XBPSD40P12KS0		AA		C	Screw (4×12KS)		
10	LPLTM4054FCZZ		AB		C	Wire fixing plate		
11	PCLR-0368FCZZ		AB		C	Dustproof collar		
12	LHLDZ1098FCZZ		AD		C	Dustproof collar holder		
13	CREFL0152FC31		BU		E	Copy lamp unit (Japan,100V series)		
	CREFL0152FC32		BU		E	Copy lamp unit (200V series)		
14	LPLTM4050FCZZ		AD		C	Wire adjusting plate		
15	XBPSD40P25000		AA		C	Screw (4×25)		
16	XBPSD40P06KS0		AA		C	Screw (4×6KS)		
17	LHLDZ1245FCZZ		AG		C	CL pulley holder		
18	NPLYZ0284FCZZ		AC		C	CL pulley		
19	XBTSE40P06000		AA		C	Screw (4×6)		
20	PCŌVP1131FCZ2		AV	N	C	Dark box cover upper		
22	LBNDJ0014FCZZ		AB		C	Wire band (Small)		
23	PSHEP4466FCZZ		AK		C	Lens upper sheet SG		
25	PSHEZ2421FCZZ		AB		C	Lens shield sheet R		
26	XRESP30-04000		AA		C	E type ring (3mm)		
27	NBRGC2029SCZZ		AB		B	Bearing (F3-6-4.7-1)		
28	PLNS-0052FCZZ		BS		B	Lens		
29	PSHEP3326FCZZ		AC		C	Lens sheild sheet side		
30	PSHEP2335FCZZ		AA		C	Shield sheet		
31	PSHEZ4390FCZZ		AC		C	Lens sheild sheet		
34	LPLTM4428FCZZ		AF		C	LHP control plate		
35	PSHEG2817FCZ1		AC		C	Lens lock sheet		
36	NSFTZ1761FCZZ		AN		C	Lens drive shaft		
37	MSPRC1289FCZZ		AA		C	Drive wire spring		
38	PWiR-0175FCZZ		AT		C	Lens drive wire H		
39	LX-BZ0660FCZZ		AC		C	Screw		
40	NPLYZ0263FCZZ		AB		C	S idle pulley		
41	LPLTM4049FCZZ		AC		C	Lens drive shaft plate		
42	DHAi-2435FCZZ		AZ		C	Optical main harness		
43	N DHAi-2939FCZZ	6	BP	N		MAIN HARNESS R(FROM 1ST LOT)(TAIWAN)	S229	
	DHAi-2791FC12		BP	N	C	Main harness R (Japan only)		
	DHAi-2797FC12		BN	N	C	Main harness R (100V series)		
	DHAi-2799FC12		BP	N	C	Main harness R (200V series)		
44	XBPSD40P12K00		AA		C	Screw (4×12K)		
45	RMŌTP0820FCZZ		CA	N	B	Mirror motor		
46	NBRGC0387FCZZ		AB		B	Bearing		
47	XXXSP40L04000		AA		C	Screw (4×4)		
48	NGERH1052FCZZ		AS		C	Winder gear 42T		
49	XBPSD40P06K00		AA		C	Screw (4×6K)		
50	CPLTM4837FC01		AQ		C	Mirror motor fixing plate		
51	NBRGC0133FCZZ		AC		B	PF bearing (ϕ8)		
52	LX-WZ0048FCZZ		AA		C	Washer		
53	XBPSD30P06KS0		AA		C	Screw (3×6KS)		
54	LBŌSZ1701FCZZ		AG		C	Lens drive pulley boss		
55	NPLYZ0262FCZ1		AH		C	Lens drive pulley		
58	XRESP70-08000		AA		C	E type ring		
59	LX-BZ0769FCZZ		AC		C	Screw		
60	XBPSD40P06000		AA		C	Screw (4×6)		
61	XEPSD40P06000		AA		C	Screw (4×6)		
62	XRESP50-06000		AA		C	E type ring (5mm)		
63	LFiX-0491FCZZ		AD		C	CL harness fixing plate		
64	XBPBZ40P06K00		AA		C	Screw (4×6K)		
65	LHLDW1286FCZZ		AD		C	Holder clip A-2		
67	LBSHC0329FCZZ		AC		C	Bushing (CE012L15)		
68	PSHEP4502FCZZ		AC	N	C	Sheet		
69	MSPRP2672FCZZ		AE	N	C	Slider fixing plate spring		
70	MSLiP0134FCZZ		AG	N	C	Lower slider		
	MSLiP0134FCZ1	3	AG		C	LOWER SLIDER(SF2150=97/12)	SP2252	97/11/01
71	LX-WZ0064FCZZ		AA		C	Snap nat (âø3)		
72	PSHEP4573FCZZ		AE	N	C	Harness protect sheet F		
73	PSHEP4574FCZZ		AE	N	C	Harness protect sheet R		
74	CCiLF0088FC51		AZ	N	E	CL coil unit (Taiwan only)		
75	LBNDJ0013FCZ1		AA		C	Wire band (Taiwan only)		
76	LBNDJ0043FCZ1		AA		C	Snap band (SG-130)(Taiwan only)		

8 Mirror holder unit

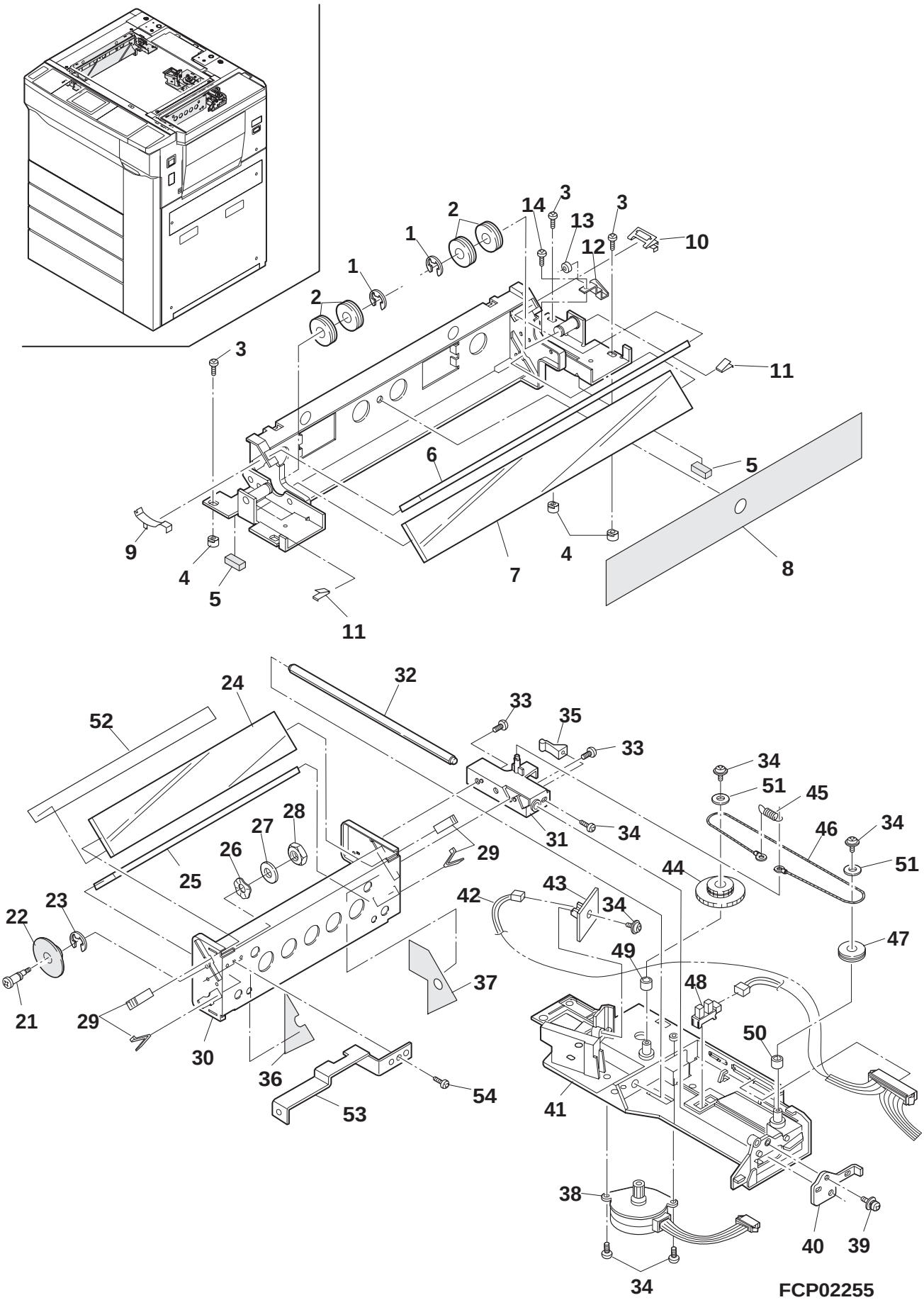

8 Mirror holder unit

NO.	PARTS CODE	COMPATIBLE	PRICE RANK	NEW MARK	PART RANK	DESCRIPTION	TR NO.	VALID
1	XRESP70-08000		AA		C	E type ring (7mm)		
2	NPLYZ0167FCZZ		AF		C	Pulley		
3	LX-BZ0339FCZZ		AA		C	Screw		
4	CSLi-0103FC31		AF		C	Slider (4pcs/set)		
5	PCUSS0201FCZZ		AA		C	MB-B cushion		
6	PMiR-0139FCZZ		AU		B	2nd mirror		
7	PMiR-0140FCZZ		AZ		B	3nd mirror		
8	PSHEZ3184FCZZ		AD		C	2.3 mirror holder sheet		
9	LFiX-0438FCZZ		AD		C	Mirror fixing plate F		
10	LFiX-0439FCZZ		AC		C	Mirror fixing plate R		
11	LFiX-0284FCZZ		AC		C	4th 5th mirror holder F		
12	LHLDZ1253FCZZ		AE		C	2nd, 3rd mirror prevention collar holder		
13	PCLR-0368FCZZ		AB		C	Dustproof collar		
14	XEPSD40P06000		AA		C	Screw (4×6)		
21	LX-BZ0654FCZZ		AG		C	Screw		
22	PCLR-0374FCZZ		AC		C	4th 5th mirror collar		
23	XRESP70-08000		AA		C	E type ring (7mm)		
24	PMiR-0102FCZ2		AW		B	4th mirror		
25	PMiR-0115FCZ1		AW		B	5th mirror		
26	LX-WZ0413FCZZ		AA		C	Washer		
27	LX-WZ0134FCZZ		AA		C	Washer		
28	XNESD40-32000		AA		C	Nut (φ4)		
29	LFiX-0284FCZZ		AC		C	4th 5th mirror holder F		
30	LHLDZ1100FCZ2		AQ		C	4th 5th mirror holder		
31	LHLDZ1087FCZZ		AH		C	4th 5th drive holder		
32	NSFTZ1762FCZZ		AF		C	4th 5th drive shaft		
33	XBPSD40P06000		AA		C	Screw (4×6)		
34	XEPSD30P05000		AA		C	Screw (3×5)		
35	MSPRT0842FCZZ		AC		C	Tray guide spring		
36	PSHEZ3133FCZZ		AB		C	4th 5th shield sheet F		
37	PSHEZ3134FCZZ		AC		C	4th 5th shield sheet R		
38	RMŌTP0697FCZZ		AV		B	Mirror base motor		
39	LX-BZ0335FCZZ		AA		C	Screw (4×6)(Red)		
40	LPLTM4051FCZZ		AB		C	4th,5th drive adjusting plate		
41	LPLTP4024FCZZ		AN		C	4th 5th motor fixing plate		
42	DHAi-2434FCZZ		AT		C	Optical harness		
43	CPWBF0941FC34		AU		E	AE sensor PWB		
44	NPLYZ0262FCZZ		AF		C	Lens drive pulley		
45	MSPRC1289FCZZ		AA		C	Drive wire spring		
46	PWiR-0146FCZZ		AK		C	Mirror drive wire		
47	NPLYZ0263FCZZ		AB		C	S idle pulley		
48	VHPGP1A71A1-1		AG		B	Photo sensor (GP1A71A1)		
49	NBRGC0455FCZZ		AC		B	4th 5th drive hold bearing(large)		
50	NBRGC0456FCZZ		AB		B	4th 5th drive hold bearing(small)		
51	LX-WZ0213FCZZ		AA		C	Washer		
52	PSHEP3404FCZZ		AD		C	4th mirror sheet		
53	LPLTM4841FCZZ		AH		C	4th 5th mirror lock plate		
54	XBPSD40P06K00		AA		C	Screw (4×6K)		

9 Copy lamp unit

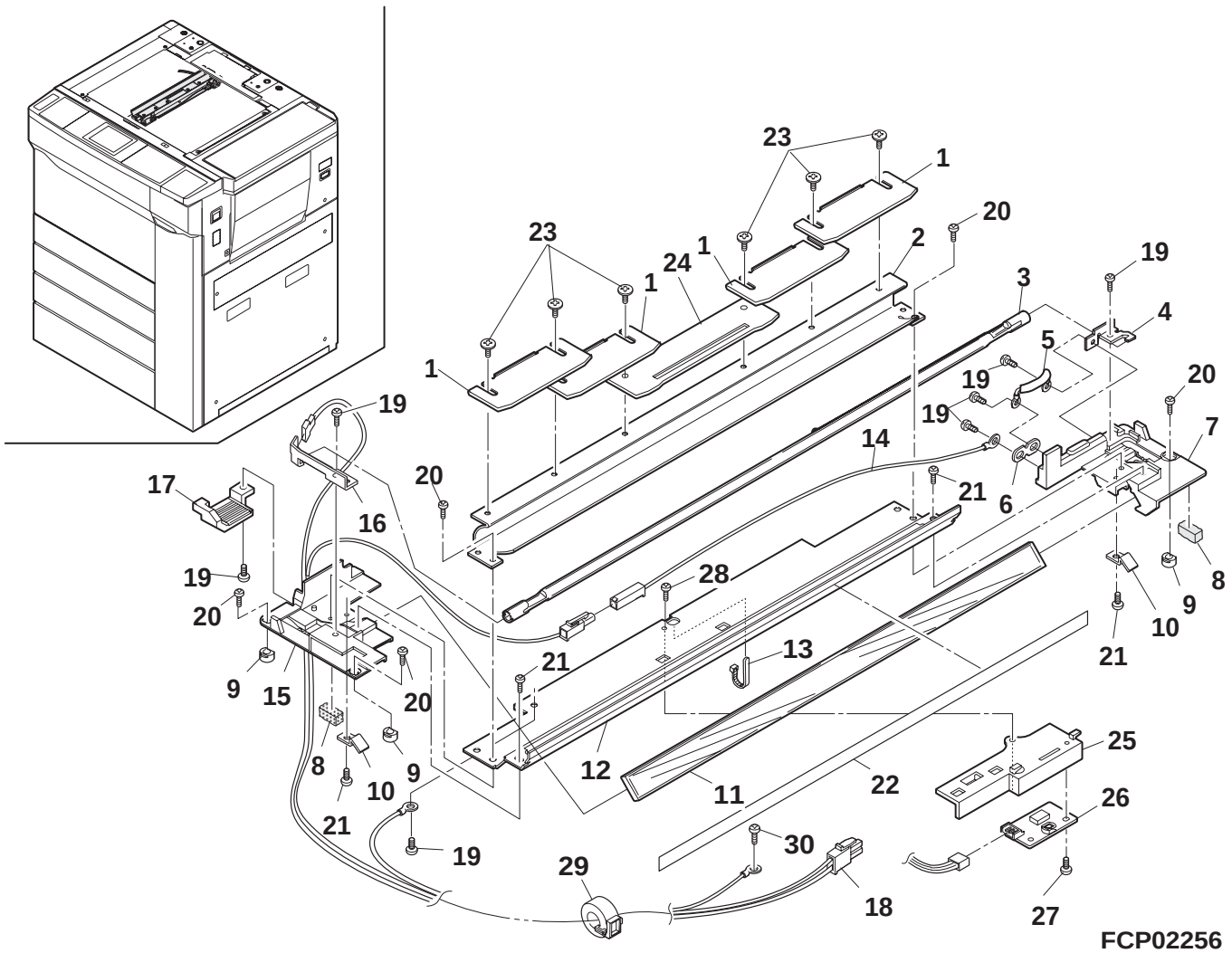

9 Copy lamp unit

NO.	PARTS CODE	COMPATIBLE	PRICE RANK	NEW MARK	PART RANK	DESCRIPTION	TR NO.	VALID
1	LPLTM4954FCZZ		AF		C	Control plate		
2	PREFL0152FCZZ		AW		C	Main reflector		
3	RLMPU0564FCZZ		BE		B	Copy lamp (Japan,100V series)		
	RLMPU0565FCZZ		BF		B	Copy lamp (200V series)		
4	MSPRP1976FCZZ		AD		C	Lamp spring F		
5	CFS-T0101FC31		AN		A	Tamperature fuse		
6	LPLTM4123FCZZ		AB		C	Terminal plate		
7	LPLTP4956FCZ1		AR		C	Side plate F		
8	PCUSU0203FCZZ		AE		C	Cushion		
9	CSLi-0103FC31		AF		C	Slider (4pcs/set)		
10	MSPRP2101FCZZ		AC		C	Mirror spring		
11	PMiR-0076FCZZ		AP		C	1st mirror		
12	CDAiU0459FC03		AS		C	Base plate		
13	LBNDJ0013FCZ1		AA		C	Wire fixing band		
14	DHAi-2067FCZZ		AV		C	Optical harness		
15	LPLTP4122FCZZ		AN		C	Side plate R		
16	MSPRP1977FCZZ		AG		C	Lamp spring R		
17	LFiX-0485FCZZ		AG		C	Harness fixing plate		
18	DHAi-2489FCZZ		BA		C	CL lead harness (Japan,100V series)		
	DHAi-2555FCZZ		BC		C	CL lead harness (200V series)		
19	XHBSD30P08000		AA		C	Screw (3×8)		
20	XEBSD40P08000		AA		C	Screw (4×8)		
21	XEBSD30P06000		AA		C	Screw (3×6)		
22	PSHEZ3962FCZZ		AH		C	Sheet		
23	LX-BZ0688FCZZ		AB		C	Screw (3×6)		
24	LPLTM4955FCZZ		AE		C	AE slit plate		
25	PCASZ0277FCZZ		AL		C	AE sensor case		
26	CPWBF0826FC31		AZ		E	AE sensor PWB		
27	XEBSF30P06000		AA		C	Screw (3×6)		
28	XBBSD30P06000		AA		C	Screw (3×6)		
29	RCORF6660RCZZ		AM		C	Core (200V series)		
30	XEPSD40P06000		AA		C	Screw (4×6K)		
	(Unit)							
901	CREFL0152FC31		BU		E	Copy lamp unit (Japan,100V series)		
	CREFL0152FC32		BU		E	Copy lamp unit (200V series)		

N :Add
:Change
:Delete
:Others

UpDate 98/06/23

10 Front frame 1

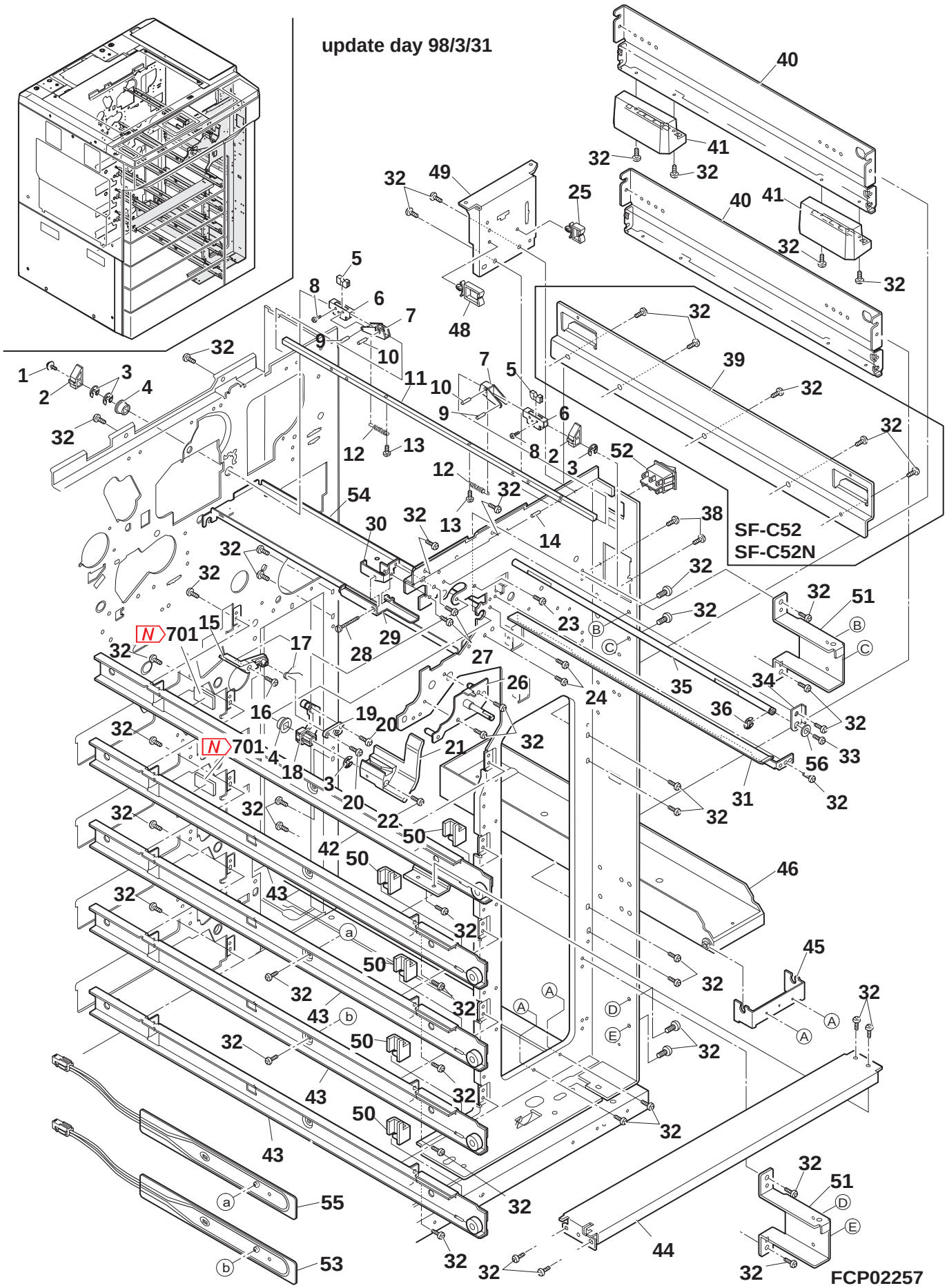

10 Front frame 1

NO.	PARTS CODE	COMPATIBLE	PRICE RANK	NEW MARK	PART RANK	DESCRIPTION	TR NO.	VALID
1	XBPSD30P06KS0		AA		C	Screw (3×6KS)		
2	NBRGP0472FCZZ		AC		B	DV pressure bearing		
3	XRESP50-06000		AA		C	E type ring (5mm)		
4	NBRGC0124FCZZ		AB		B	Bearing		
5	MHNG-0103FCZZ		AB		C	Pressure hinge C		
6	MHNG-0102FCZZ		AA		C	Pressure hinge B		
7	MHNG-0101FCZ1		AB		C	Pressure hinge A		
8	XBPSD30P10000		AA		C	Screw (3×10)		
9	XPSSJ20-14000		AA		C	Spring pin (ϕM2-14)		
10	XPSSJ30-14000		AA		C	Pin (ϕ3-14)		
11	NSFTZ2175FCZZ		AW		C	DV pressure shaft		
12	MSPRC1286FCZZ		AC		C	Pressure spring		
13	LX-BZ0241FCZZ		AA		C	Screw (3×4)		
14	XPSSJ30-20000		AC		C	Pin (ϕ3-20)		
15	MLNKP0025FCZZ		AE		C	Pressure link C		
16	LX-BZ0610FCZZ		AA		C	Screw		
17	MSPRC2312FCZZ		AC		C	Pressure link spring		
18	MLNKP0023FCZZ		AF		C	Pressure link A		
19	MLNKP0024FCZZ		AE		C	Pressure link B		
20	XEBSD30P10000		AA		C	Screw (3×10)		
21	MLEVP0427FCBZ		AE		C	Pressure lever		
22	XBPSD30P08K00		AA		C	Screw (3×8K)		
23	LX-BZ0117FCZZ		AB		C	Screw (4×20)		
24	XHBSE40P12000		AA		C	Screw (4×12)		
25	LHLDW0898FCZZ		AA		C	Wire holder (WS-2)		
26	CPLTM4847FC02		AH		C	PS control plate		
27	XBBSD40P06000		AA		C	Screw (4×6)		
28	LX-BZ0755FCZZ		AC		C	Screw		
29	LSTPF0311FCZZ		AH		C	DV stopper		
30	LPLTM4808FCZZ		AF		C	DV stopper fixing plate		
31	PGiDH1569FCZZ		AH		C	DV guide B		
32	XHBSE40P08000		AA		C	Screw (4×8)		
33	XBBSD40P08000		AA		C	Screw (4×8)		
34	LPLTM4810FCZZ		AD		C	Fixing shaft rotation plate		
35	NSFTZ2137FCZZ		AU		C	Hopper fixing shaft		
36	XRESP70-08000		AA		C	E type ring (7mm)		
38	XBSSD30P06000		AA		C	Screw (3×6)		
39	LPLTM4806FCZZ		AQ		C	LCC fixing plate lower (SF-C52/C52N)		
40	LSTYM0210FCZZ		AP		C	LCC joint stay		
41	JHNDP0126FCZZ		AK		C	Handle		
42	CRALM0096FC02		AW		C	ADU drawer rail R		
43	CRALM0096FC01		AR		C	Drawer rail R		
44	LSTYM0215FCZZ		AQ		C	ADU joint stay		
45	LPLTM4833FCZZ		AG		C	Fulcrum plate		
46	PSRA-0036FCZZ		AV		C	Bottle holder		
48	LHLDW1284FCZZ		AC		C	Wire holder (LWS-4)		
49	LPLTM4800FCZZ		AK		C	Hopper fixing plate		
50	LSTPF0295FCZZ		AC		C	Drawer stopper		
51	LPLTM4793FCZZ		AL		C	Front exterior hinge plate R lower		
52	QSW-Z9291QCZZ		AY	N	B	Seesaw switch		
⚠ 53	RHETP0065FCZZ		AZ		B	Dry heater (Japan only)		
54	PSRA-0038FCZZ		AN	N	C	Toner holder		
⚠ 55	RHETP0066FCZZ		AZ		B	Dry heater (Japan only)		
56	LX-WZ0055FCZZ		AA		C	Washer		
701	N PSPAZ1401FCZZ	6	AD	N		TRANDER SPACER	SP2252	96/12/01

11 Front frame 2

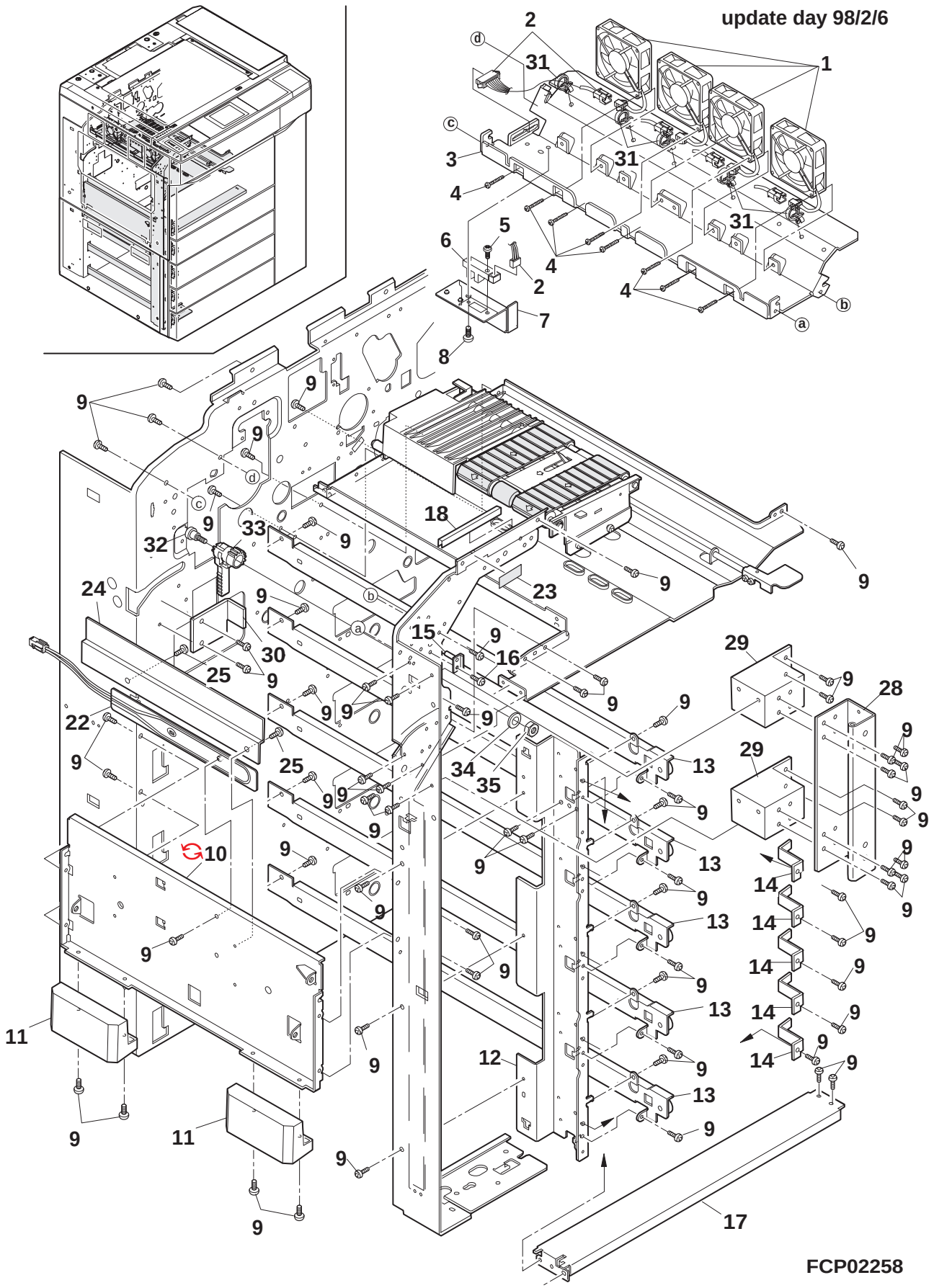

11 Front frame 2

NO.	PARTS CODE	COMPATIBLE	PRICE RANK	NEW MARK	PART RANK	DESCRIPTION	TR NO.	VALID
1	RMOTE0700FCZZ		AX		B	Suction fan		
2	DHAi-2803FCZZ		AP	N	C	VFM interface harness		
3	LPLTM5356FCZZ		AS	N	C	Joint plate		
4	XHPSD40P30000		AA		C	Screw (4×30)		
5	XBPSD40P12000		AA		C	Screw (4×12)		
6	VHPGP3A38//-1		AH		B	Photo transistor (GP3A38)		
7	LPLTM5357FCZZ		AG	N	C	Sensor fixing plate		
8	XHBSE40P06000		AA		C	Screw (4×6)		
9	XHBSE40P08000		AA		C	Screw (4×8)		
10	LPLTM4807FCZZ		AV		C	Delivery exterior fixing plate		
	♻ LPLTM4807FCZ1	1	AU		C	DELIVERY EXTERIOR FIXING PLATE(FROM 1ST LOT)	SP2234	
11	JHNDP0126FCZZ		AK		C	Handle		
12	LPLTM4799FCZZ		AR		C	Rail fixing plate L		
13	CRALM0105FC01		AR		C	Drawer rail L		
14	LSTPF0333FCZZ		AC		C	Tray rail stopper DSK		
15	CPLTM5376FC01		AF		C	Delivery lock plate		
16	XHBSD40P08000		AA		C	Screw (4×8)		
17	LSTYM0215FCZZ		AQ		C	ADU joint stay		
18	PHOG-0392FCZZ		AC		E	Bushing (L=69)		
⚠ 22	RHETP0066FCZZ		AZ		B	Dry heater (Japan only)		
23	PSHEP4043FCZZ		AF		C	Sheet		
24	PCOVP1324FCZZ		AH		C	Dry heater cover (Japan only)		
25	XHBSE40P08000		AA		C	Screw (4×8)(Japan only)		
28	MHNG-0193FCZZ		AQ		C	Left exterior hinge		
29	LDAiU0526FCZZ		AK		C	Left exterior high base		
30	PCOVP1344FCZZ		AE		C	Reversing connector cover (For Europe)		
31	LBNDJ0043FCZ1		AA		C	Snap band		
32	LX-BZ0489FCZZ		AB		C	Mirror base fixing screw		
33	MLEVP0740FCZZ		AL	N	C	Upper pawl lever		
34	XWHSD40-08100		AA		C	Washer		
35	XNESD40-32000		AA		C	Nut		

12 Rear frame 1

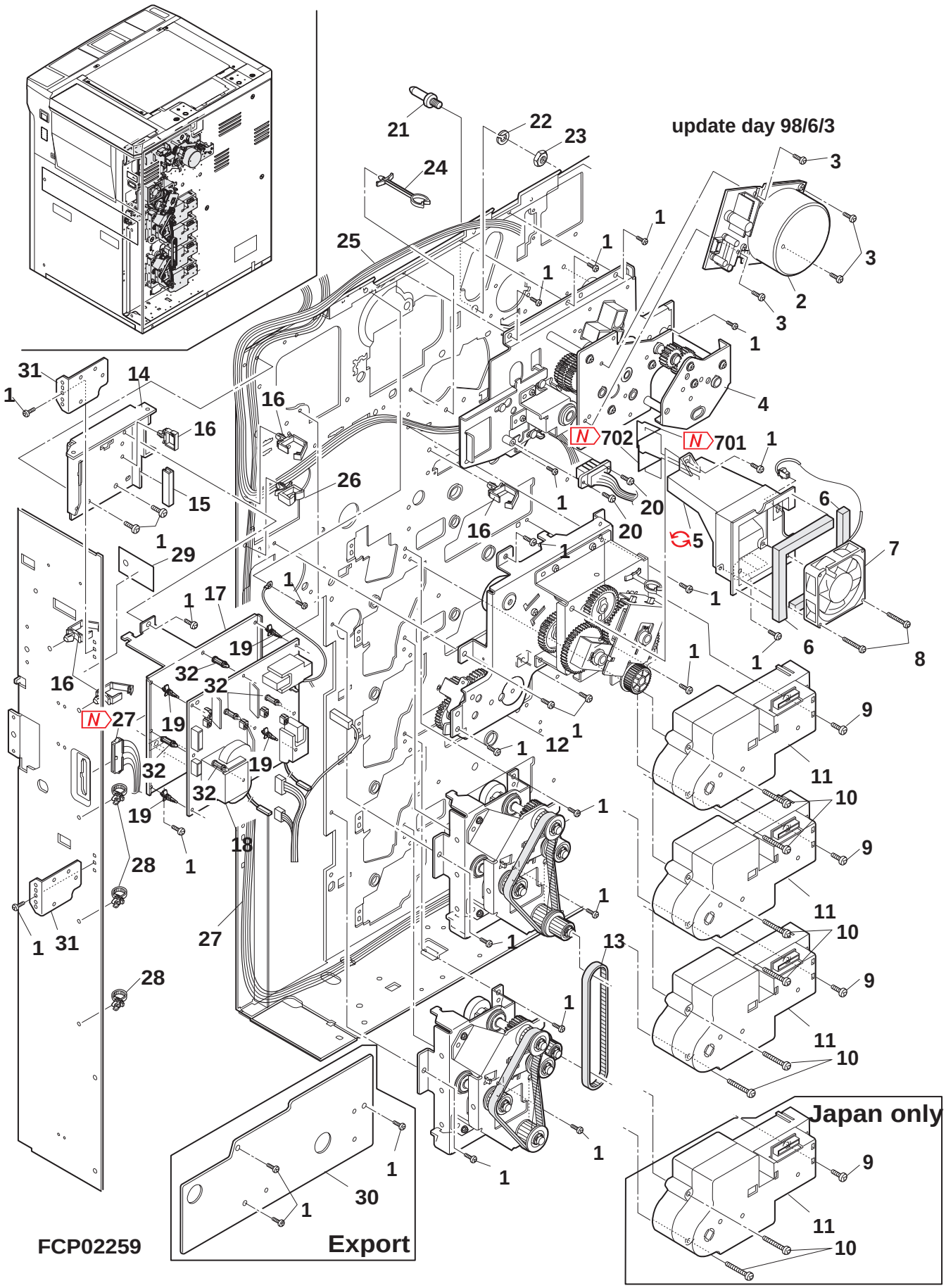

12 Rear frame 1

NO.	PARTS CODE	COMPATIBLE	PRICE RANK	NEW MARK	PART RANK	DESCRIPTION	TR NO.	VALID
1	XHBSE40P08000		AA		C	Screw (4×8)		
2	RMOTP0770FCZZ		BQ		B	Drum motor		
3	LX-BZ0689FCZZ		AA		C	Screw (4×8)		
4	CPLTM4820FC51		BT		E	Drum drive unit		
5	PDUC-0097FCZ1		AK		C	Duct		
	PDUC-0097FCZ2	3	AK		C	DUCT(FROM 1ST LOT)	SP2253	
6	PMLT-0987FCZZ		AH		C	Duct cushion		
7	RMOTE0700FCZZ		AX		B	Suction Fan		
8	XEPSD40P35000		AA		C	Screw (4×35)		
9	XBBSD40P10000		AA		C	Screw (4×10)		
10	XBBSD40P30000		AA		C	Screw (4×30)		
11	DUNTM6785FCZZ		BE		E	Lift up unit		
12	CPLTM4827FC52		BT		E	Transport drive unit		
13	NBLTH0249FCZZ		AN		B	Tray joint belt B		
14	LPLTM4800FCZZ		AK		C	Hopper fixing plate		
15	PHOG-1010HCZZ		AB		C	Bushing (60mm)		
16	LHLDW1264FCZZ		AD		C	Wire holder (LWS-8S-2.5W)		
17	LPLTM4811FCZZ		AL		C	High voltage PWB fixing plate		
18	RTRNZ0510FCZZ		BX		B	High voltage transformer (Japan,100V series)		
	RTRNZ0510FCZ1		BY		B	High voltage transformer (200V series)		
19	LHLDF6647RCZZ		AB		C	PWB holder A		
20	XBPSD30P08KS0		AA		C	Screw (3×8KS)		
21	LBOSZ1673FCZZ		AS		C	Drum boss R		
22	XWSSD60-15000		AA		C	Washer (6mm)		
23	XNESD60-50000		AA		C	Nut (φ6)		
24	LHLDW1119FCZZ		AA		C	Holder		
25	DHAi-2789FC12		BT	N	C	Main harness L (Japan only)		
	DHAi-2790FC12		BS	N	C	Main harness L (100V series)		
	DHAi-2796FC12		BT	N	C	Main harness L (200V series)		
26	LHLDW0898FCZZ		AA		C	Wire holder (WS-2)		
27	N DHAi-2931FCZZ	6	BK	N		LOWER UNIT MAIN HARNESS(FROM 1ST LOT)(TAIWAN)	S229	
	DHAi-2793FC12		BM	N	C	Lower unit main harness (Japan only)		
	DHAi-2794FC12		BH	N	C	Lower unit main harness (Export·· 100V series)		
	DHAi-2798FC12		BH	N	C	Lower unit main harness (200V series)		
28	LBNDJ0043FCZ1		AA		C	Snap band (SG-130)		
29	PSHEP1096FCZZ		AD		C	Harness protect sheet		
30	PCOVP1325FCZZ		AH		C	Cover (Except Japan)		
31	LPLTM4798FCZZ		AG		C	Rear exterior fixing plate		
32	LSUPP0005FCZZ		AC		C	PWB supporter (TCBS-8N)		
701	N PSHEP4582FCZZ	6	AD	N		DUCT MYLAR,UPPER(FROM 1ST LOT)	SP2253	
702	N PSHEP4583FCZZ	6	AD	N		DUCT MYLAR,UPPER(FROM 1ST LOT)	SP2253	

13 Rear fram 2

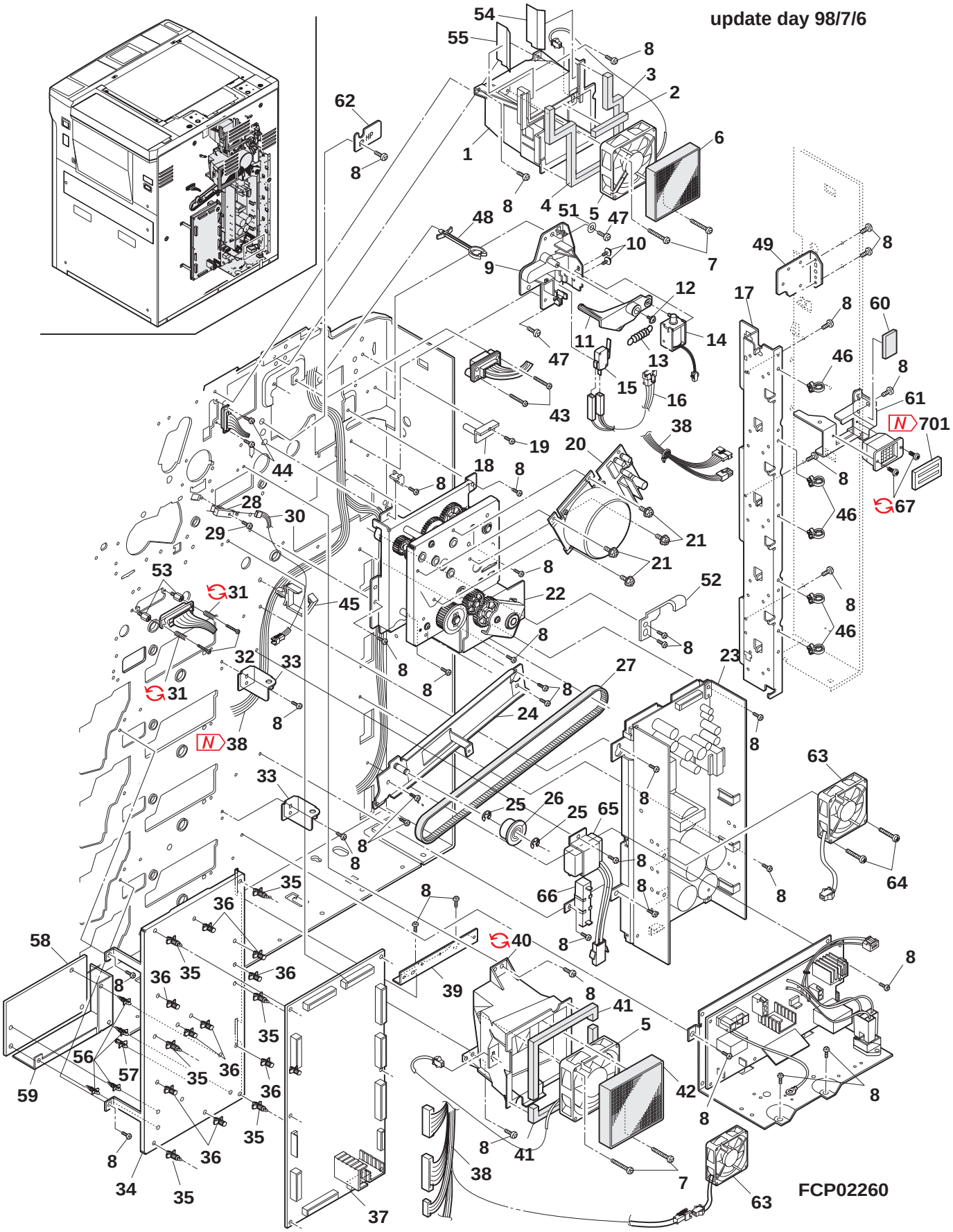

13 Rear fram 2

NO.	PARTS CODE	COMPATIBLE	PRICE RANK	NEW MARK	PART RANK	DESCRIPTION	TR NO.	VALID
1	PDUC-0096FCZ1		AN		C	MC duct		
2	PMLT-0982FCZZ		AD		C	MC duct cushion A		
3	PMLT-0988FCZZ		AH		C	MC duct cushion B		
4	PMLT-0989FCZZ		AL		C	MC duct cushion C		
5	RMOTE0630FCZZ		AW		B	Main motor (cooling)		
6	PFiLZ0221FCZZ		AZ		C	MC air filter		
7	XEPSD40P35000		AA		C	Screw (4×35)		
8	XHBSE40P08000		AA		C	Screw (4×8)		
9	LPLTM4029FCZZ		AG		C	Solenoid fixing plate		
10	XBPSD30P06KS0		AA		C	Screw (3×6KS)		
11	MLEVP0674FCZZ		AF		C	Solenoid lever		
12	XEPSD30P08X00		AA		C	Screw (3×8X)		
13	MSPRT2008FCZZ		AA		C	Lever spring		
14	RPLU-0241FCZZ		AM		B	R solenoid		
15	QSW-M0319FCZZ		AG		B	Door switch (Japan,100V series)		
	QSW-M0372FCZZ		AH		B	Door switch (200V series)		
16	DHAi-2467FCZZ		AK		C	DSWE harness		
17	LPLTM4799FCZZ		AR		C	Rail fixing plate L		
18	CPLTM5376FC01		AF		C	Delivery lock plate		
19	XHBSD40P08000		AA		C	Screw (4×8)		
20	RMOTP0769FCZ1		BR		B	Main motor		
21	LX-BZ0689FCZZ		AA		C	Screw (4×8)		
22	CPLTM4817FC61		BV	N	E	Main drive unit		
23	⚠ CPWBN1124FC33		CB	N	E	DC power supply PWB (Japan,100V series)		
	⚠ CPWBN1125FC33		CE	N	E	DC power supply PWB (200V series)		
24	CPLTM4809FC01		AP		C	Joint plate		
25	XRESP70-08000		AA		C	E type ring (7mm)		
26	CPLYZ0070FC01		AE		C	Idle pulley		
27	NBLTH0250FCZZ		AP		B	Unit joint belt		
28	VHPGP3A38//-1		AH		B	Photo transistor (GP3A38)		
29	XBPSD40P10000		AA		C	Screw (4×10)		
30	DHAi-2445FCZZ		AH		C	PSD interface harness		
31	MSPRC2363FCZZ		AD		C	ADU drawer spring		
	♻ MSPRC2698FCZZ	1	AC		C	ADU DRAWER SPRING(FROM 1ST LOT,Q'TY:2)	SP2233	
32	LX-BZ0510FCZZ		AB		C	Screw		
33	LPLTM4814FCZZ		AE		C	Main PWB fix fulcrum plate		
34	LPLTM4813FCZ1		AQ		C	Main PWB fixing plate		
35	LSUPP0060FCZZ		AA		C	PWB supporter (SPLS-6)		
36	LSUPP0076FCZZ		AA		C	PWB supporter (SPS-6)		
37	CPWBN1240FC51		CD	N	E	Main PWB		
38	N DHAi-2939FCZZ	6	BP	N		MAIN HARNESS R(FROM 1ST LOT)(TAIWAN)	S229	
	DHAi-2791FC12		BP	N	C	Main harness R (Japan only)		
	DHAi-2797FC12		BN	N	C	Main harness R (100V series)		
	DHAi-2799FC12		BP	N	C	Main frame R (200V series)		
39	LPLTM4229FCZZ		AG		C	Front frame fixing plate		
40	PDUC-0095FCZZ		AP		C	Suction duct		
	♻ PDUC-0095FCZ1	1	AP		C	SUCTION DUCT	SP2294	98/05/01
41	PMLT-0983FCZZ		AH		C	Suction duct cushion A		
42	PFiLZ0220FCZZ		BA		B	Suction air filter		
43	XBBSD40P12000		AA		C	Screw (4×12)		
44	LX-BZ0583FCZZ		AB		C	Screw		
45	LHLDW1264FCZZ		AD		C	Wire holder (LWS-8S-2.5W)		
46	LBNDJ0043FCZ1		AA		C	Snap band (SG-130)		
47	XHBSD40P10000		AA		C	Screw (4×10)		
48	LHLDW7075SCZZ		AA		C	Holder		
49	LPLTM4798FCZZ		AG		C	Rear exterior fixing plate		
51	LX-WZ0019FCZZ		AA		C	Washer		
52	QEARP0081FCZZ		AE		C	ADU earth plate		
53	NSFTZ2238FCZZ		AF		C	Shaft		
54	PSHEP3912FCZZ		AH		C	MC duct sheet L		
55	PSHEP3913FCZZ		AH		C	MC duct sheet R		
56	LSUPP0059FCZZ		AA		C	PWB supporter (SPLS-4)(200V series)		
57	LSUPP0109FCZZ		AC	N	C	PWB supporter (SPLN-4)(200V series)		
58	CPWBF1239FC51		BE	N	E	Sub AC PWB (200V series)		
59	PSHEP4575FCZZ		AF	N	C	Sub AC PWB protect sheet (200V series)		
60	PGSK-0018FCZZ		AG	N	C	Gasket A		
61	LPLTM5354FCZZ		AK	N	C	Fixer plate		
62	PCOVP1426FCZZ		AD	N	C	Position boss cover		
63	RMOTE0754FCZZ		AY		B	CFM		
64	XHPSD40P30000		AA		C	Screw (4×30)		
65	RCiLF0079FCZ1		AZ		B	Coil (10MH2.5)(200V series)		
⚠ 66	CR-WZ0464FC02		AX		B	Dry heater (200V series)		
67	XBPSD30P08KS0		AA		C	Screw (3×8KS)		
	♻ XBBSD30P08000		AA		C	SCREW(3×8)(FROM 1ST LOT)	SP2266	
701	N PFTA-0110FCZZ		AF	N		LATTICE CONNECTOR LID(FROM 1ST LOT)(USA,CANADA)	SP2266	

14 Process upper unit

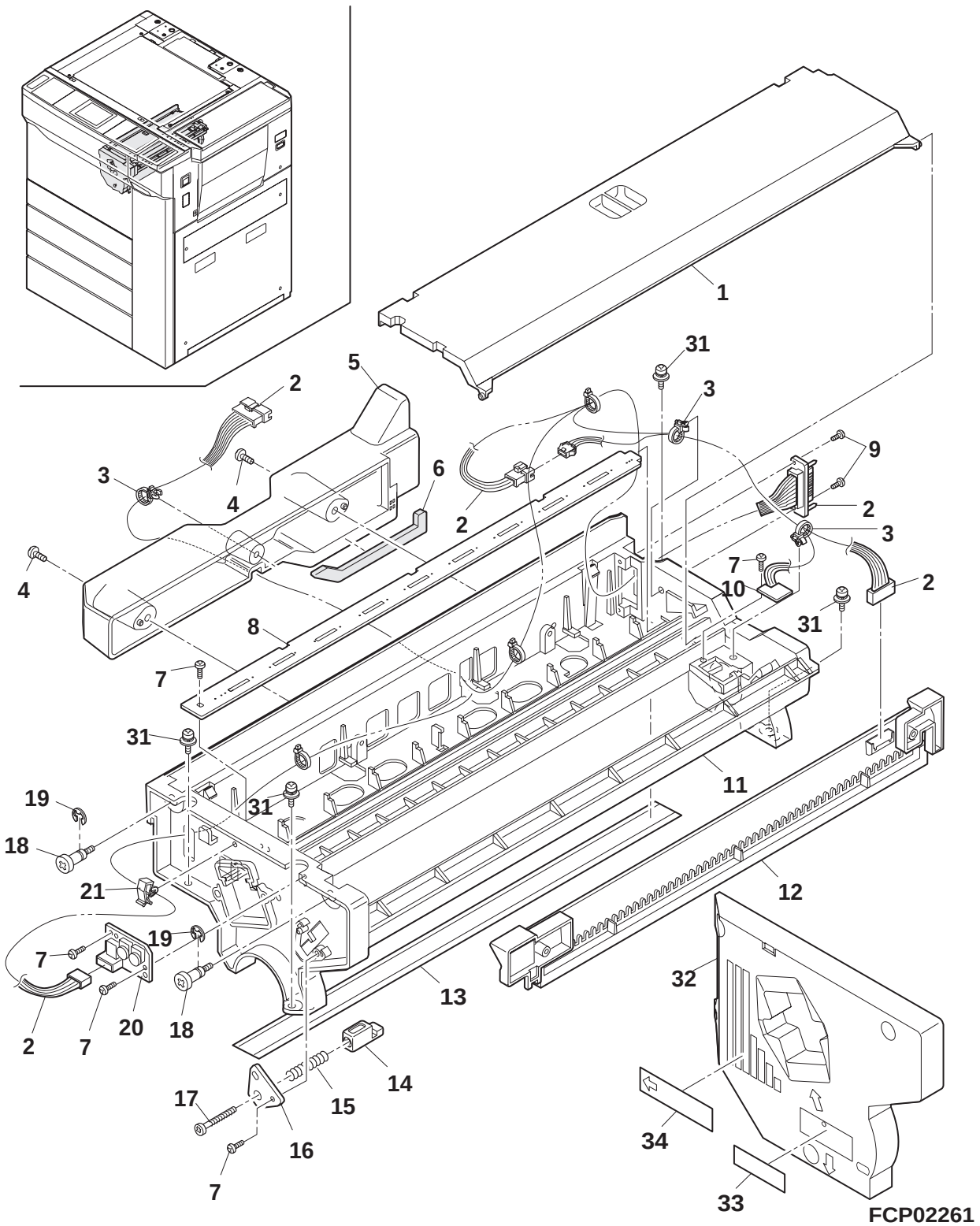

14 Process upper unit

NO.	PARTS CODE	COMPATIBLE	PRICE RANK	NEW MARK	PART RANK	DESCRIPTION	TR NO.	VALID
1	PCÕVP1298FCZ1		AN		C	Process duct cover		
2	DHAi-2440FCZZ		AZ		C	Process upper harness		
3	LBNDJ0043FCZ1		AA		C	Snap band (SG-130)		
4	XEBSD40P08000		AA		C	Screw (4×8)		
5	PDUC-0099FCZ1		AM		C	Process duct		
6	PMLT-0977FCZ1		AE		C	Process duct cushion		
7	XEBSD30P06000		AA		C	Screw (3×6)		
8	RLMPP0563FCZZ		AY		B	Lamp		
9	XEBSD30P10000		AA		C	Screw (3×10)		
10	CPWBF0975FC51		AQ		E	DR mark sensor PWB		
11	LFRM-0863FCZZ		BA		C	Process frame U		
12	CPWBF0932FC55		BP		E	BL PWB		
13	PFiLZ0224FCZZ		AL		B	DL filter		
14	LDAiU0208FCZZ		AD		C	BL adjust block		
15	MSPRC0949FCZZ		AA		C	BL adjust spring		
16	LPLTM4871FCZZ		AC		C	BL adjusting plate		
17	LX-BZ0280FCZZ		AC		C	Screw		
18	LX-BZ0656FCZZ		AD		C	Screw		
19	XRESP50-06000		AA		C	E type ring (5mm)		
20	CPWBF1131FC51		AU		E	Sensor VR PWB		
21	LHLDW1013FCZZ		AB		C	Clamp holder (YMC-10)		
31	XBPS240P10KS0		AB		C	Screw (4×10KS)		
32	CCÕVP1299FC01		AN		C	Process inner cover		
33	TCAUH0819FCZZ		AA		C	High voltage caution label (MC) (Japan only)		
	TCAUH0974FCZZ		AB		C	High voltage caution label (MC) (Australia,New Zealand, U,Kingdom)		
	TCAUH0821FCZZ		AA		C	High voltage caution label (MC) (Other countries)		
34	TCADZ1223FCZZ		AD		D	Caution paper card DR		
	(Unit)							
901	CFRM-0863FC51		BT		E	Process frame upper unit		

15 Process lower unit

update day 98/4/28

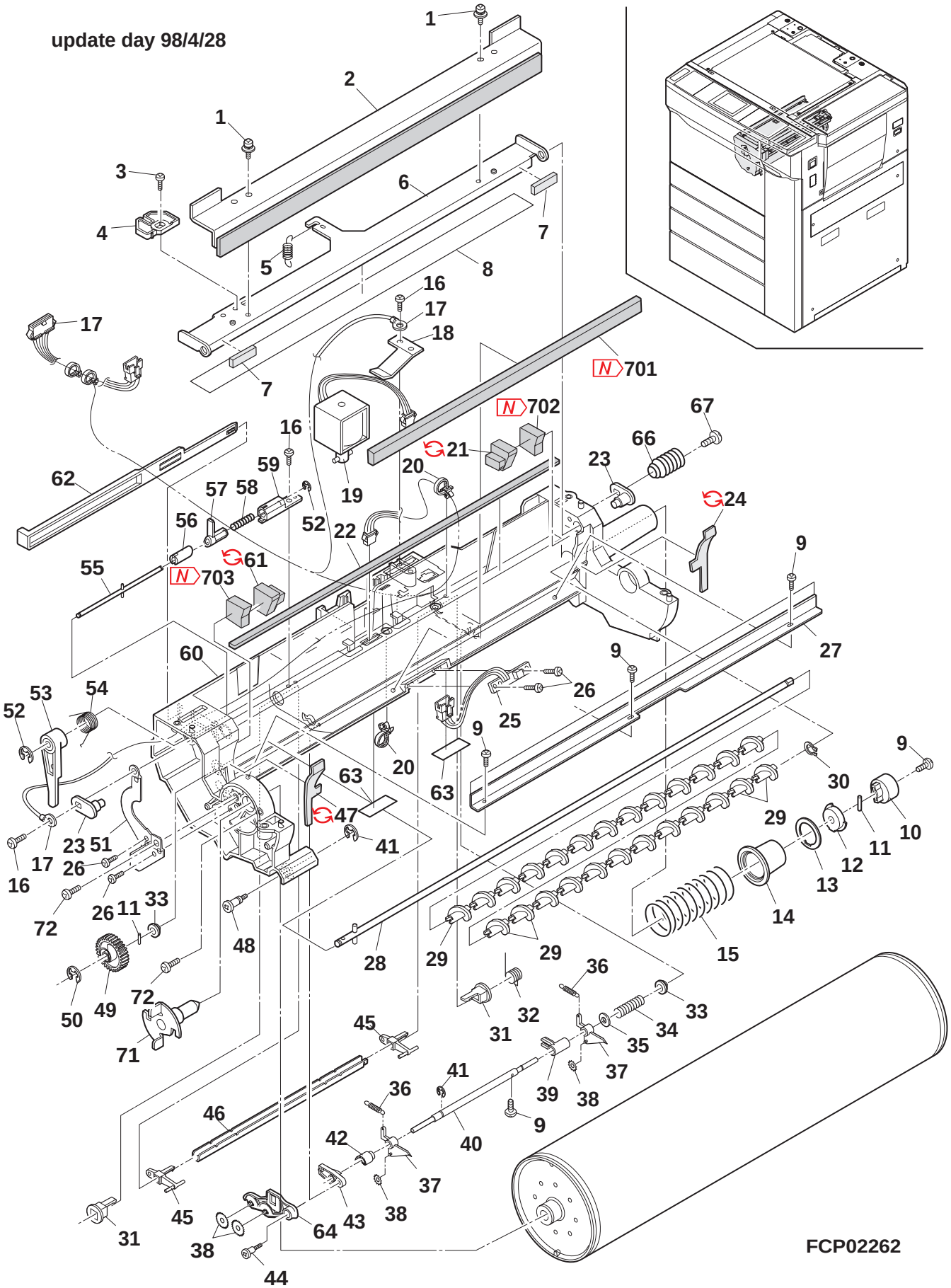

15 Process lower unit

NO.	PARTS CODE	COMPATIBLE	PRICE RANK	NEW MARK	PART RANK	DESCRIPTION	TR NO.	VALID
1	LX-BZ0334FCZZ		AA		C	Screw (4×8KS)(Blue)		
2	UCLEZ0125FCZZ		AW		S	Cleaning blade		
3	XBBSD40P08000		AA		C	Screw (4×8)		
4	LPLTP4512FCZZ		AD		C	CL plate		
5	MSPRC2314FCZZ		AC		C	Blade pressure spring		
6	LPLTM4872FCZZ		AQ		C	Blade fixing plate		
7	PMLT-0981FCZZ		AB		C	Blade side cushion		
8	PSHEP3801FCZZ		AE		C	Main seal sheet		
9	XBBSD30P06000		AA		C	Screw (3×6)		
10	NCPL-0020FCZZ		AC		C	Cleaner drive cup ring		
11	LPiNS0165FCZZ		AB		C	Pin (ϕ2-8)		
12	NBRGP0321FCZZ		AD		B	Bearing		
13	LSTPP0312FCZZ		AD		C	CL shutter stopper		
14	PSHT-0068FCZZ		AE		C	CL shutter		
15	MSPRC2313FCZZ		AD		C	CL shutter spring		
16	XEBSD40P08000		AA		C	Screw (4×8)		
17	DHAi-2441FCZZ		AL		C	Process lower harness		
18	MSPRP2110FCZZ		AC		C	Process earth		
19	RPLU-0288FCZZ		AS		B	Drum pawl solenoid		
20	LBNDJ0043FCZ1		AA		C	Snap band (SG-130)		
21	PMLT-0980FCZZ		AE		C	Side cushion R		
	PMLT-1158FCZZ	4	AD		C	SIDE MOLT RA HP	SP2254	97/10/01
22	PMLT-0978FCZZ		AD		C	Main seal cushion		
23	CPLTM4304FC01		AH		C	Blade fulcrum plate		
24	PSEL-0651FCZZ		AD		C	Side seal R		
	PSEL-0770FCZZ	4	AE		C	SIDE SEAL FHP	SP2254	97/10/01
25	CPWBF0976FC52		AR		E	DR sensor PWB		
26	XEPSD30P06000		AA		C	Screw (3×6)		
27	PSEL-0649FCZZ		AS		C	Toner holder seal		
28	CSFTZ2178FC51		AR		E	Screw shaft unit		
29	NSRW-0025FCZZ		AC		C	Toner screw		
30	PRNGP0025FCZZ		AA		C	G type ring (GTW-5)		
31	NBRGP0473FCZZ		AC		B	DR pawl drive bearing		
32	MSPRC2315FCZZ		AC		C	DR Pawl return spring L		
33	NBRGP0322FCZZ		AC		C	Bearing MX		
34	MSPRC2155FCZZ		AB		C	DR slide spring		
35	LX-WZ0139FCZZ		AA		C	Washer		
36	MSPRT2059FCZZ		AD		C	Drum pawl spring		
37	PTME-0227FCZZ		AK		S	Drum pawl		
38	LX-WZ0310FCZZ		AB		C	Separator pawl washer		
39	MLEVP0622FCZZ		AF		C	Drum pawl rotation lever		
40	NSFTZ2179FCZZ		AQ		C	Drum pawl shaft		
41	XRESP50-06000		AA		C	E type ring (5mm)		
42	CCLR-0350FC01		AQ		C	Slide housing collar		
43	NBRGP0423FCZZ		AD		C	Bearing for pawl		
44	LX-BZ0773FCZZ		AH		C	Screw		
45	MLEVP0621FCZZ		AF		C	DR pawl drive lever		
46	LPLTM4873FCZZ		AD		C	DR Pawl drive shaft plate		
47	PSEL-0650FCZZ		AD		C	Side seal F		
	PSEL-0769FCZZ	4	AE		C	SIDE SEAL FHP	SP2254	97/10/01
48	LX-BZ0656FCZZ		AD		C	Screw (Blue)		
49	NGERH0930FCZZ		AE		C	Brush roller gear 30T		
50	XRESP40-06000		AA		C	4E-Type ring (4mm)		
51	QEARP0077FCZZ		AG		C	Process earth plate		
52	XRESP30-06000		AA		C	E type ring (3mm)		
53	CARMP0174FC01		AT		C	CL arm		
54	MSPRC2148FCZZ		AB		C	CL arm spring		
55	CSFTZ2180FC51		AM		E	CL shaft		
56	MCAMP0090FCZZ		AC		C	CL cam A		
57	MCAMP0091FCZZ		AC		C	CL cam B		
58	MSPRC2147FCZZ		AB		C	CL spring		
59	LHLDZ1174FCZZ		AC		C	CL holder		
60	LFRM-0864FCZZ		BA		C	Process frame L		
61	PMLT-0979FCZZ		AE		C	Side cushion F		
	PMLT-1156FCZZ	4	AD		C	SIDE MOLT FA HP	SP2254	97/10/01
62	MARMP0193FCZZ		AG		C	Blade release arm		
63	PSHEZ3882FCZZ		AB		C	Delevery pawl sheet		
64	PGiDM1608FCZZ		AE		C	Process paper guide		
66	MSPRC2373FCZZ		AD		C	CL earth spring		
67	XEPSD40P08000		AA		C	Screw (4×8)		
71	CPLTM4878FC01		AK		C	DR fixing plate A (North America, Central South America, Asia)		
	CPLTM4878FC02		AK		C	DR fixing plate B (Japan,Europe,Oceania,the Near and Middle East,Africa)		
72	XBBS240P08000		AB		C	Screw (4×8)		
701	N PMLT-1159FCZZ	6	AD	N		REAR MOLT HP	SP2254	97/10/01
702	N PMLT-1157FCZZ	6	AC	N		SIDE MOLT RHP	SP2254	97/10/01
703	N PMLT-1155FCZZ	6	AC	N		SIDE MOLT F HP	SP2254	97/10/01
	(Unit)							
901	CFRM-0864FC51		BV		E	Process frame lower unit		

16 Fusing upper unit

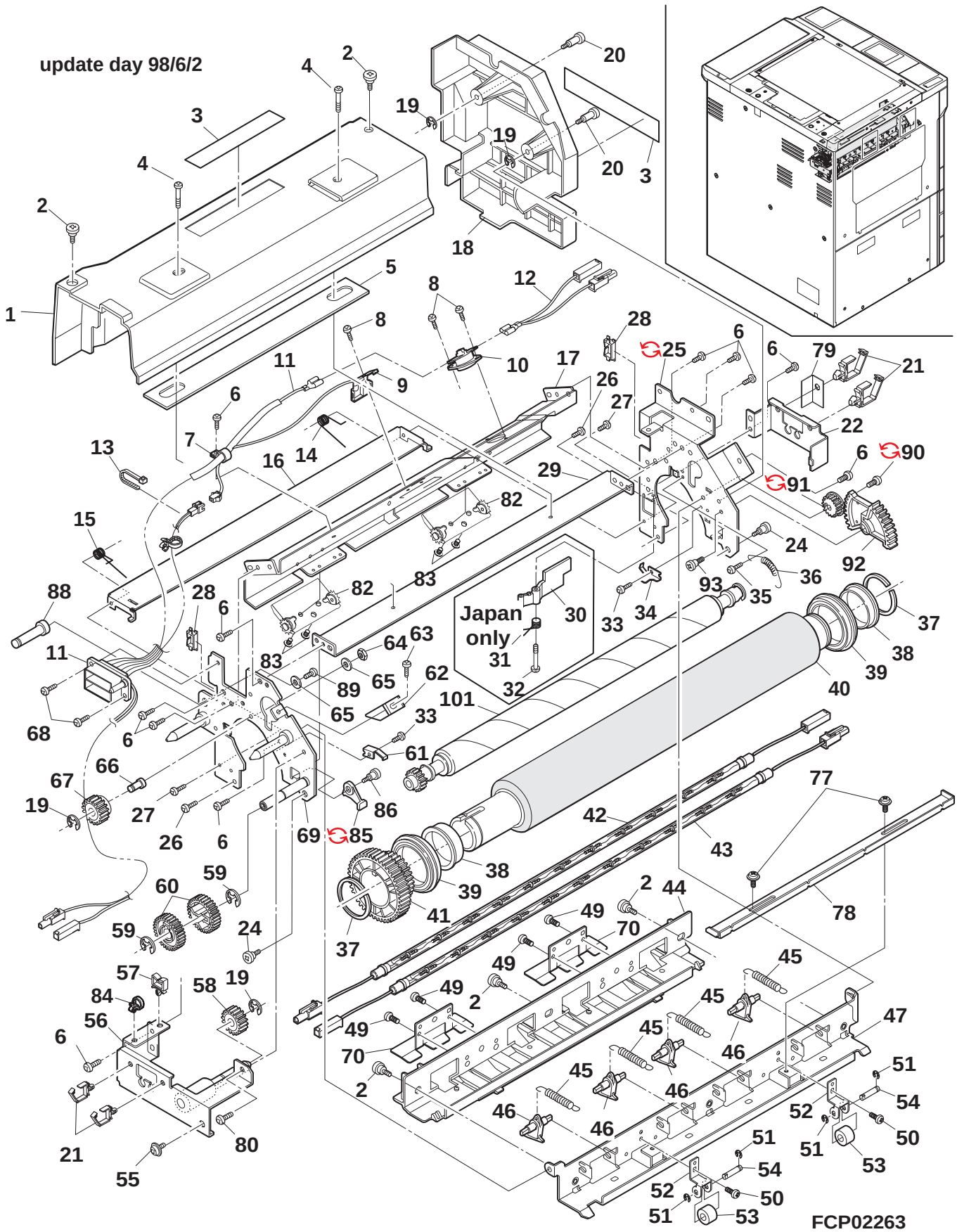

16 Fusing upper unit

NO.	PARTS CODE	COMPATIBLE	PRICE RANK	NEW MARK	PART RANK	DESCRIPTION	TR NO.	VALID
1	PCŌVP1421FCZZ		AY	N	D	Fusing upper cover		
2	LX-BZ0254FCZZ		AB		C	Screw		
3	TCAUH0990FCZZ		AE		C	High temperature coution label (Japan only)		
	TCAUH0991FCZZ		AE		C	High temperature coution label (CANADA,LAG2)		
	TCAUH0992FCZZ		AE		C	High temperature coution label (Other countries)		
4	LX-BZ0021FCZZ		AA		C	Screw (Left type)		
5	JHNDP0130FCZZ		AH		C	Fusing handle		
6	XHBSE40P08000		AA		C	Screw (4×8)		
7	LHLDW0910FCZZ		AB		C	Heat-resistant holder		
8	XHBSD30P04000		AA		C	Screw (3×4)		
9	RDTCT0121FCZ1		AV		B	Thermistor		
⚠ 10	RTHM-0014FCZZ		AM		B	Thermostat (Japan only)		
⚠	RTHM-0009FCZZ		AK		B	Thermostat (Except Japan)		
11	DHAi-2438FCZZ		AY		C	Fusing harness (Japan,200V series)		
	DHAi-2439FCZZ		AX		C	Fusing harness (100V series)		
12	DHAi-2430FCZZ		AL		C	HL harness (Japan,200V series)		
	DHAi-2431FCZZ		AH		C	HL harness (100V series)		
13	LBNDJ0026FCZZ		AA		C	Wire band (T-18R, HS)		
14	MSPRC2310FCZZ		AC		C	Fusing front lower paper guide spring F		
15	MSPRC2311FCZZ		AC		C	Fusing front lower paper guide spring R		
16	PGiDH1571FCZ1		AN		C	Fusing front lower paper guide		
17	LPLTM4861FCZZ		AR		C	Fusing frame upper joint plate		
18	PCŌVP1293FCZZ		AU		C	Fusing front cover		
19	XRESP50-06000		AA		C	E type ring (5mm)		
20	LX-BZ0656FCZZ		AD		C	Screw		
21	LHLDW1155FCZZ		AC		C	Wire holder (LWS3S2W)(Japan,200V series)		
	LHLDW1057FCZZ		AB		C	Wire holder (LWS-3S)(100V series)		
22	LPLTM4863FCZ1		AF		C	Heater lamp maintenance plate F (Japan,200V series)		
	LPLTM4863FCZZ		AF		C	Heater lamp maintenance plate F (100V series)		
24	LX-BZ0285FCZZ		AB		C	Screw		
25	LFRM-0859FCZ1		AL	N	C	Fusing frame F upper		
	♻ LFRM-0859FCZ2	3	AL		C	FUSING FRAME F UPPER(FROM 1ST LOT)	DTE365	
26	LX-BZ0784FCZZ		AC		C	Screw		
27	XHBSD30P14000		AA		C	Screw (3×14)		
28	LHLDW1262FCZ1		AE		C	Wire holder (EDS-3F)		
29	LSTYM0212FCZZ		AL		C	Fusing upper stay		
30	MLEVP0488FCZ1		AD		C	PGTM lever (Japan only)		
31	MSPRC2324FCZZ		AC		C	Lever spring (Japan only)		
32	LX-BZ0492FCZZ		AB		C	Screw (Japan only)		
33	XHBSD30P04000		AA		C	Screw (3×4)		
34	LFiX-0515FCZZ		AE	N	C	Fusing bearing fixing plate F		
35	LX-BZ0373FCZZ		AA		C	Screw (M3)		
36	MSPRT1179FCZZ		AB		C	Upper cleaning roller spring		
37	PRNGP0082FCZZ		AD		C	Stop ring		
38	LBSHZ0343FCZZ		AP	N	C	Heat-resistant bush		
39	NBRGY0551FCZZ		AX		C	Fusing bearing		
40	NRŌLT1074FCZ2		BQ	N	C	Upper heat roller		
41	NGERH0475FCZ1		AK		C	Heat roller gear 60T		
⚠ 42	RLMPU0555FCZ1		BC		B	Heater lamp (100V·· Japan)		
⚠	RLMPU0556FCZ1		BC		B	Heater lamp (110V)		
⚠	RLMPU0557FCZ1		BC		B	Heater lamp (120V)		
⚠	RLMPU0558FCZ1		BC		B	Heater lamp (127V)		
⚠	RLMPU0611FCZZ		BB	N	B	Heater lamp (200V series)		
⚠ 43	RLMPU0554FCZZ		BC		B	2nd heater lamp (100V·· Japan)		
⚠	RLMPU0612FCZZ		BB	N	B	2nd heater lamp (200V series)		
44	PGiDM1776FCZZ		AS	N	C	Fusing rear upper paper guide (AB series·· Except Japan)		
	PGiDM1776FCZ1		AS	N	C	Fusing rear upper paper guide (Japan,inch series)		
45	MSPRC2097FCZ1		AB		C	Upper pawl spring		
46	PTME-0226FCZZ		AQ		S	Fusing separator pawl upper		
47	LPLTM5360FCZZ		AP	N	C	Upper pawl fixing plate		
49	XBPSD30P06KS0		AA		C	Screw (3×6KS)		
50	XBPSD30P06KS0		AA		C	Screw (3×6KS)(AB series·· Except Japan)		
51	XRESP30-04000		AA		C	E type ring (3mm)(AB series·· Except Japan)		
52	LPLTM5363FCZZ		AE	N	C	Roller fixing plate (AB series·· Except Japan)		
53	PCLR-0438FCZZ		AG	N	C	Fusing delivery collar (AB series·· Except Japan)		
54	NSFTZ2441FCZZ		AF	N	C	Roller shaft (AB series·· Except Japan)		
55	XBBSD40P08000		AA		C	Screw (4×8)		
56	CPLTM4864FC02		AN		C	Heater lamp maintenance plate R (Japan,200V series)		
	CPLTM4864FC01		AN		C	Heater lamp maintenance plate R (100V series)		
57	LHLDW2047SCZZ		AA		C	Wire holder (WS-1NS)		
58	NGERH1077FCZZ		AK		C	CL gear 24T		
59	XRESP70-08000		AA		C	E type ring (7mm)		
60	NGERH0621FCZZ		AD		C	Delivery roller gear 30T		
61	LFiX-0487FCZZ		AD		C	Fusing bearing fixing plate R		
62	LFiX-0481FCZZ		AD		C	Upper CL roller fixing plate		
63	XBBS240P08000		AB		C	Screw (4×8)		
64	XNESD40-32000		AA		C	Nut (φ4)		

16 Fusing upper unit

NO.	PARTS CODE	COMPATIBLE	PRICE RANK	NEW MARK	PART RANK	DESCRIPTION	TR NO.	VALID
65	XWHSD40-08100		AA		C	Washer (φ4)		
66	NSFTZ2187FCZZ		AL		C	Upper CL idle shaft		
67	CGERH1073FC01		AP		C	Upper CL 24T gear		
68	XHBSE40P10000		AA		C	Screw (4×10)		
69	CFRM-0860FC03		AS	N	C	Fusing frame R upper		
70	PGiDH1778FCZZ		AF	N	C	Fusing rear guide F		
77	LX-BZ0488FCZZ		AA		C	Screw (3×6)(Blue)		
78	LPLTM5227FCZ1		AF		C	Upper pawl SP fixing plate		
79	PSHEP4023FCZZ		AE		C	Fusing harness guide sheet		
80	XHBSE40P06000		AA		C	Screw (4×6)		
82	CGiDH1619FC51		AN		E	Fusing front upper paper guide unit		
83	LX-BZ0465FCZZ		AA		C	Screw		
84	LBNDJ0044FCZZ		AB		C	Snap band (T30RSF)		
85	LSTPC0346FCZZ		AF	N	C	Delivery stopper R		
	LSTPC0346FCZ1		AF		C	DELIVERY STOPPER R(FROM 1ST LOT)	SP2266	
86	LX-BZ0680FCZZ		AB		C	Screw		
88	LBŌSZ1867FCZZ		AL	N	C	Fusing control boss H		
89	XBPSD40P08K00		AA		C	Screw (4×8K)		
90	XHBSE40P12000		AA		C	Screw (4×12)		
	XHBSD40P12000	1	AA		C	SCREW	DTE365	97/12/01
91	NGERH1227FCZZ		AN	N	C	Upper pawl fulcrum gear		
	NGERH1227FCZ1		AN		C	UPPER PAWL FULCRUM GEAR(FROM 1ST LOT)	SP2266	
92	NGERH1226FCZZ		AH	N	C	Upper pawl rotation gear		
93	LX-BZ0714FCZZ		AC		C	Screw		
101	CRŌLN1076FC32		BK	N	E	Upper CL roller unit		
	(Unit)							
901	DUNTW6907FC50		CM	N	E	Fusing unit (This includes Block 16,17) (100V·· Japan)		
	DUNTW6907FC51		CN	N	E	Fusing unit (This includes Block 16,17) (120V·· Inch series)		
	DUNTW6907FC53		CP	N	E	Fusing unit (This includes Block 16,17) (220V/230V/240V·· AB series)		
	DUNTW6907FC57		CP	N	E	Fusing unit (This includes Block 16,17) (110V)		
	DUNTW6907FC58		CP	N	E	Fusing unit (This includes Block 16,17) (120V·· AB series)		
	DUNTW6907FC59		CP	N	E	Fusing unit (This includes Block 16,17) (127V)		
	DUNTW6907FC56		CP	N	E	Fusing unit (This includes Block 16,17) (220V·· Inch series)		

17 Fusing lower unit

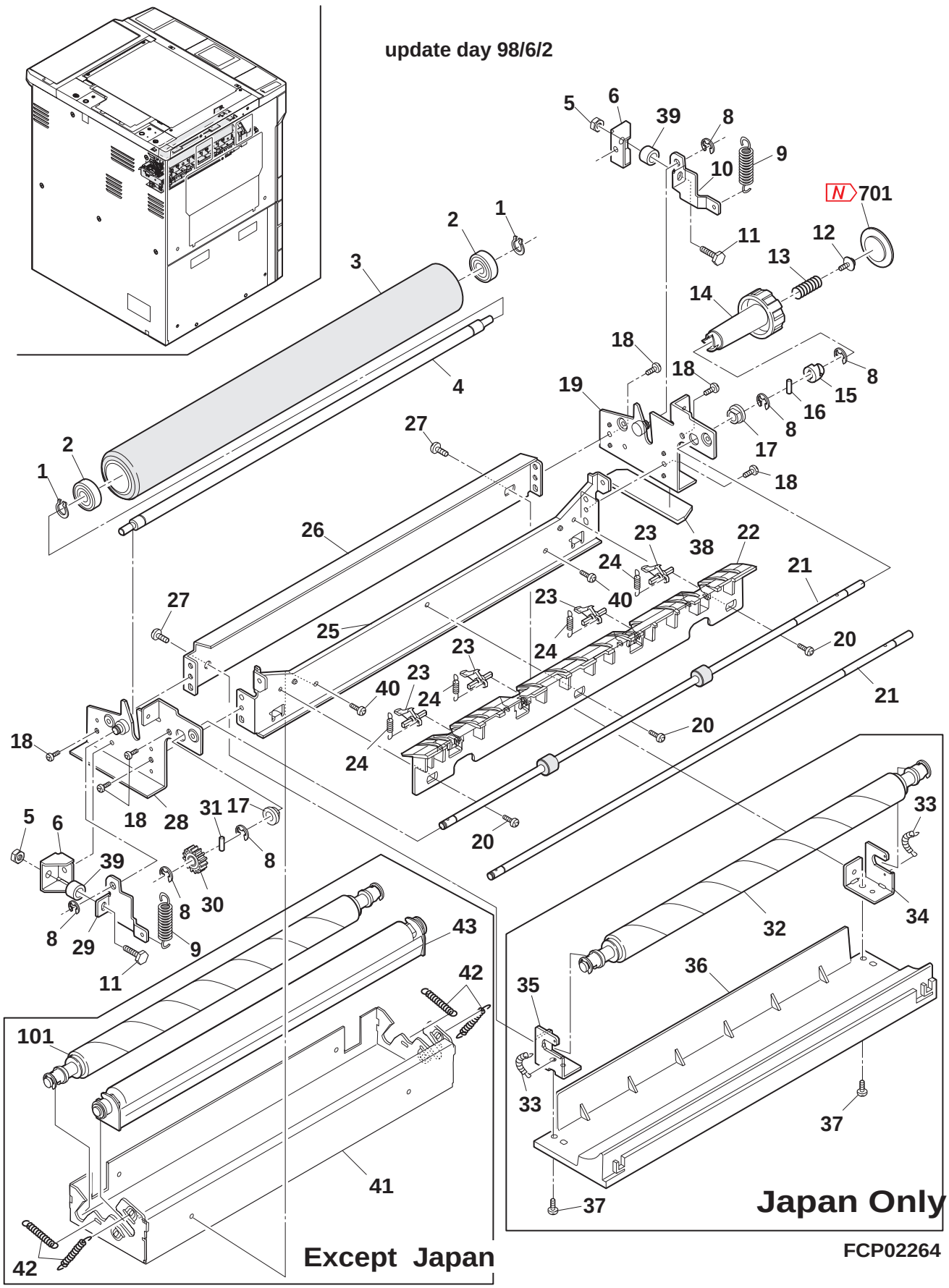

17 Fusing lower unit

NO.	PARTS CODE	COMPATIBLE	PRICE RANK	NEW MARK	PART RANK	DESCRIPTION	TR NO.	VALID
1	PRNGP0091FCZZ		AC		C	C ring		
2	NBRGY0539FCZZ		AQ		B	Lower heat roller bearing		
3	NRŌLi1075FCZZ		BS		C	Lower heat roller		
4	NSFTZ2171FCZ1		AQ		C	Pressure roller shaft		
5	LX-NZ0072FCZZ		AA		C	Nut (Blue)		
6	LANGT1381FCZZ		AE		C	Angle		
8	XRESP50-06000		AA		C	E type ring (5mm)		
9	MSPRT2401FCZZ		AF		C	Pressure spring (120V·· Inch series)		
	MSPRT2309FCZZ		AF		C	Pressure spring (Except 120V·· Inch series)		
10	MLEVF0679FCZ1		AF		C	Pressure lever F		
11	LX-BZ0757FCZZ		AC		C	Screw		
12	LX-BZ0711FCZZ		AA		C	Screw (3×8)		
13	MSPRC2659FCZZ		AD	N	C	Ratchet spring		
14	JKNBP0134FCZZ		AK	N	C	Fusing knob		
15	LDAiU0571FCZZ		AE	N	C	Ratchet block		
16	LPiNS0096FCZZ		AB		C	Pin (ϕ3-12)		
17	NBRGM5006BCZZ		AB		C	Metal D (B-F6-7)		
18	XHBSD40P06000		AA		C	Screw (4×6)		
19	CFRM-0861FC02		AP		C	Fusing F lower frame (This includes No.6)		
20	LX-BZ0764FCZZ		AC		C	Screw		
21	NSFTZ2434FCZZ		AN	N	C	Fusing delivery shaft (Japan,Inch series)		
	NRŌLR1197FCZZ		AS		C	Fusing delivery roller (AB series)		
22	PGiDM1626FCZ2		AQ		C	Fusing rear lower paper guide		
23	PTME-0174FCZ1		AG		S	Lower separator pawl		
24	MSPRT1953FCZZ		AA		C	Lower pawl spring		
25	LPLTM4859FCZZ		AM		C	Fusing frame lower joint plate L		
26	LPLTM4860FCZZ		AL		C	Fusing frame lower joint plate R		
27	LX-BZ0764FCZZ		AC		C	Screw		
28	CFRM-0862FC02		AP		C	Fusing R lower frame (This includes No.6)		
29	MLEVF0680FCZ1		AF		C	Pressure lever R		
30	NGERH0236FCZZ		AC		C	Stir gear 18T		
31	LPiNS0155FCZZ		AA		C	Pin (ϕ3-10)		
32	CRŌLN0912FC31		AY		E	Lower CL roller unit (Japan only)		
33	MSPRC1415FCZZ		AB		C	Lower CL roller spring (Japan only)		
34	LPLTM4857FCZZ		AF		C	Lower CL roller maintenance plate F (Japan only)		
35	LPLTM4858FCZZ		AF		C	Lower CL roller maintenance plate R (Japan only)		
36	PCŌVP1294FCZZ		AV		C	Fusing lower cover (Japan only)		
37	LX-BZ0465FCZZ		AA		C	Screw (4×6)(Japan only)		
38	PSHEP3993FCZZ		AD		C	Fusing frame lower sheet		
39	PCLR-0405FCZZ		AA		C	Stopper coller		
40	LX-BZ0764FCZZ		AC		C	Screw (Except Japan)		
41	LBRCR0063FCZZ		AU		C	Roller fixing bracket (Except Japan)		
42	MSPRT1230FCZZ		AC		C	Lower CL pressure spring (Except Japan)		
43	CRŌLP1107FC33		BS		E	Roller unit (Except Japan)		
101	CRŌLN1106FC31		BB		E	Lower CL roller unit (Except Japan)		
701	N TLABZ4286FCZZ		AF	N		FUSING ROTATION LABEL(FROM 1ST LOT)(EUROPE)	SP2266	
	(Unit)							
⚠ 901	DUNTW6907FC50		CM	N	E	Fusing unit (This includes Block 16,17) (100V·· Japan)		
⚠	DUNTW6907FC51		CN	N	E	Fusing unit (This includes Block 16,17) (120V·· Inch series)		
⚠	DUNTW6907FC53		CP	N	E	Fusing unit (This includes Block 16,17) (220V/230V/240V·· AB series)		
⚠	DUNTW6907FC57		CP	N	E	Fusing unit (This includes Block 16,17) (110V)		
⚠	DUNTW6907FC58		CP	N	E	Fusing unit (This includes Block 16,17) (120V·· AB series)		
⚠	DUNTW6907FC59		CP	N	E	Fusing unit (This includes Block 16,17) (127V)		
⚠	DUNTW6907FC56		CP	N	E	Fusing unit (This includes Block 16,17) (220V·· Inch series)		

N :Add
:Change
:Delete
:Others

UpDate 98/07/13

18 Toner hopper unit

update day 98/7/6

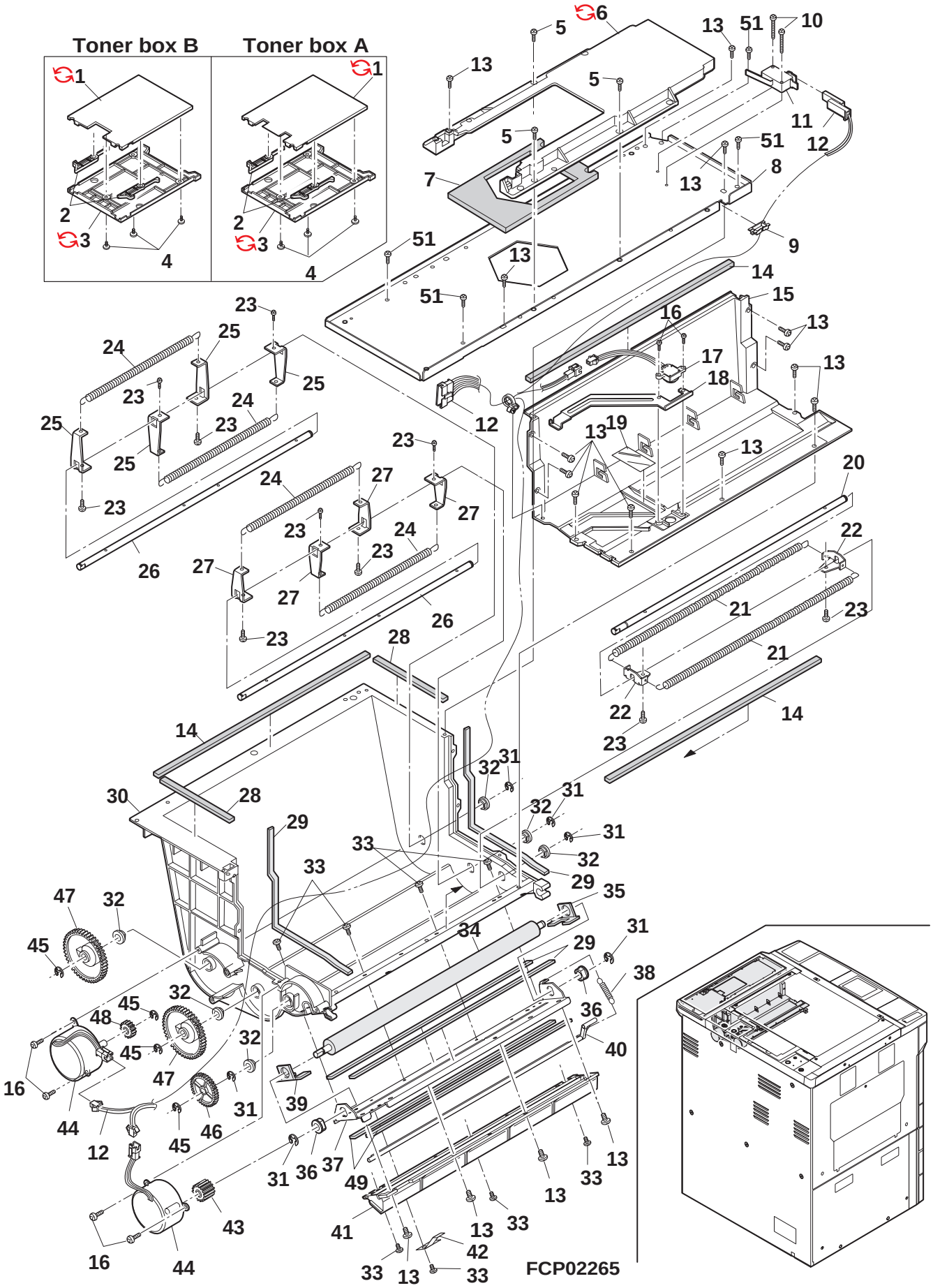

18 Toner hopper unit

NO.	PARTS CODE	COMPATIBLE	PRICE RANK	NEW MARK	PART RANK	DESCRIPTION	TR NO.	VALID
1	LDAiU0466FC10	1	AH		E	SHUTTER BASE A UPPER	SP2294	98/05/01
	LDAiU0466FC11	1	AH		E	SHUTTER BASE B UPPER	SP2294	98/05/01
	LDAiU0466FCZZ		AG		C	Shutter base A upper (North America,Central South America,Asia)		
	LDAiU0466FCZ1		AG		C	Shutter base B upper (Japan,Europe,Oceania,the Near and Middle east,Africa)		
2	LSTPP0293FCZZ		AC		C	Stopper		
3	LDAiU0467FCZZ		AG		C	C shutter base lower		
	LDAiU0467FCZ2	1	AH		C	C SHUTTER BASE LOWER	SP2294	98/05/01
4	LX-BZ0707FCZZ		AA		C	Screw (M3)		
5	XHBSE40P08000		AA		C	Screw (4×8)		
6	PGiDM1445FCZZ		AP		C	Cartridge guide		
	PGiDM1445FCZ1	1	AP		C	CARTRIGE GUIDE	SP2294	98/05/01
7	PMLT-0933FCZZ		AG		C	Toner supply cushion		
8	LDAiU0513FCZZ		AT		C	Hopper base plate		
9	LHLDW1263FCZZ		AC		C	Wire holder (EDS0607M)		
10	XBPSD30P14000		AA		C	Screw (3×14)		
11	QSW-M0319FCZZ		AG		B	Door switch		
12	DHAi-2432FCZZ		AQ		C	Toner hopper harness		
13	XEBSD40P10000		AA		C	Screw (4×10)		
14	PMLT-0972FCZZ		AD		C	Cushion A		
15	PCŌVP1297FCZZ		AT		C	Hopper cover		
16	XEBSD30P08000		AA		C	Screw (3×8)		
17	RDTCT0119FCZZ		AZ		B	Toner sensor		
18	LPLTM4870FCZZ		AH		C	Sensor vibration plate		
19	PSHEP3823FCZZ		AC		C	Harness protection sheet		
20	NSFTZ2176FCZZ		AP		C	Shaft A		
21	MSPRT1900FCZZ		AC		C	Toner stirring spring B		
22	LANGT1383FCZZ		AE		C	Toner stirring spring angle C		
23	XBPSD30P06K00		AA		C	Screw (3×6)		
24	MSPRT1717FCZZ		AB		C	Toner stirring spring A		
25	LANGT1306FCZ1		AE		C	Toner stirring spring angle A		
26	NSFTZ2177FCZZ		AR		C	Shaft B		
27	LANGT1307FCZ1		AE		C	Toner stirring spring angle B		
28	PMLT-0976FCZZ		AC		C	Housing Cushion B		
29	PMLT-0975FCZZ		AD		C	Housing Cushion A		
30	PBŌX-0103FCZZ		AY		C	Hopper housing		
31	XRESP50-06000		AA		C	E type ring (5mm)		
32	NBRGC0173FCZZ		AE		B	Cleaner shaft bearing		
33	XBBSD30P06000		AA		C	Screw (3×6)		
34	NRŌLS1079FCZZ		AT		C	Toner supply roller		
35	PMLT-0973FCZZ		AD		C	Cushion F		
36	NBRGP0540FCZZ		AE		C	Toner supply roller bearing		
37	LPLTM4869FCZZ		AN		C	Toner plate		
38	MSPRC1281FCZZ		AA		C	Upper separator pawl spring		
39	PMLT-0974FCZZ		AD		C	Cushion R		
40	PSHT-0067FCZZ		AH		C	Shutter		
41	PGiDM1568FCZZ		AK		C	Shutter housing guide		
42	MSPRP2110FCZZ		AC		C	Process earth spring		
43	NGERH0698FCZZ		AD		C	Toner motor gear 16T		
44	RMŌTE0771FCZZ		AZ		B	Toner motor		
45	XRESP40-06000		AA		C	4E-Type ring (4mm)		
46	NGERH0884FCZZ		AC		C	Gear TA		
47	NGERH1055FCZZ		AG		C	Cam gear 54T		
48	NGERH0623FCZZ		AB		C	Stirring gear		
49	PMLT-0994FCZZ		AC		C	Cushion B		
51	XHBSE40P08000		AA		C	Screw (4×8)		
	(Unit)							
901	CBŌX-0103FC51		BY		E	Toner hopper unit (North America,Central South America,Asia)		
	CBŌX-0103FC52		BY		E	Toner hopper unit (Japan,Europe,Oceania,the Near and Middle East,Africa)		

19 Developing unit

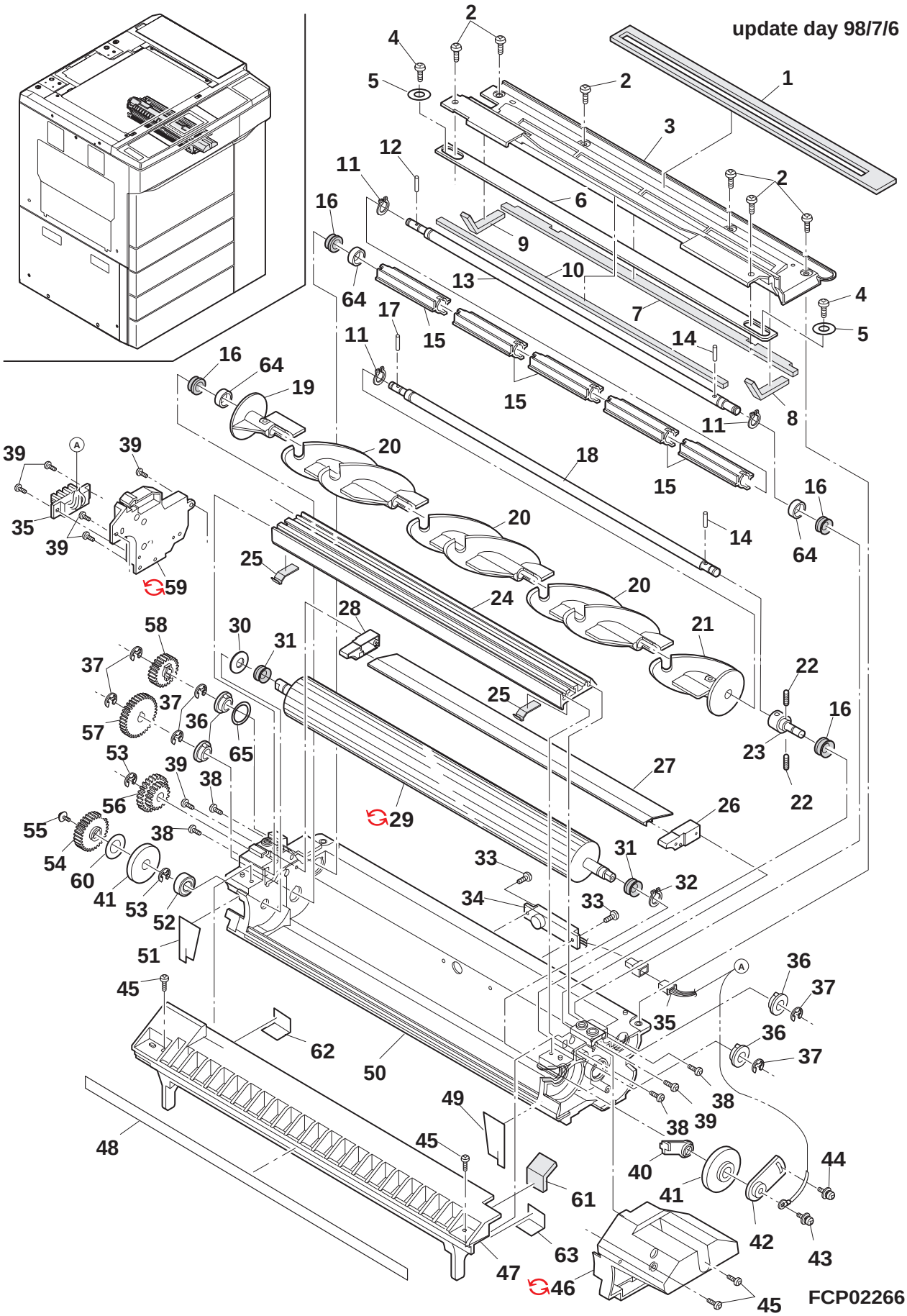

19 Developing unit

NO.	PARTS CODE	COMPATIBLE	PRICE RANK	NEW MARK	PART RANK	DESCRIPTION	TR NO.	VALID
1	PSEL-0768FCZZ		AK	N	C	Joint seal		
2	LX-BZ0779FCZZ		AA		C	Screw		
3	MJNTP0019FCZZ		AP		C	DV joint		
4	XEBSD40P06000		AA		C	Screw (4×6)		
5	XWHSD60-10130		AA		C	Washer (6mm)		
6	JHNDP0127FCZZ		AG		C	DV handle		
7	PMLT-0969FCZZ		AE		C	DV cushion A		
8	PMLT-0971FCZZ		AC		C	DV cushion C		
9	PMLT-0970FCZZ		AC		C	DV cushion B		
10	PMLT-0986FCZZ		AD		C	DV cushion D		
11	PRNGP0023FCZZ		AA		C	G type ring (G7)		
12	LPiNS0133FCZZ		AA		C	Pin (ϕ2-10)		
13	NSFTZ2495FCZZ		AP	N	C	Shaft		
14	LPiNS0155FCZZ		AA		C	Pin (ϕ3-10)		
15	NHAN-0009FCZZ		AB		C	Fin		
16	PRNGP0097FCZZ		AK		C	V ring (V-8)		
17	LPiNS0134FCZZ		AB		C	Pin (ϕ2-12)		
18	NSFTZ2496FCZZ		AP	N	C	Stir roller shaft		
19	NHAN-0018FCZZ		AF		C	Stir fin A		
20	NHAN-0007FCZZ		AC		C	Stir fin C		
21	NHAN-0019FCZZ		AF		C	Stir fin B		
22	LX-BZ0380FCZZ		AB		C	Screw (3×3)		
23	NSFTZ2494FCZZ		AL		C	Stir joint shaft		
24	LPLTM4865FCZZ		AW		C	DV doctor		
25	PSHEZ3829FCZ1		AC		C	Doctor sheet		
26	LPLTP4868FCZZ		AD		C	Side fixing plate B		
27	LPLTM4866FCZZ		AK		C	Plate		
28	LPLTP4867FCZZ		AD		C	Side fixing plate A		
29	NRŌLM1078FCZZ		BN		C	Magnet roller		
	NRŌLM1078FCZ1	3	BN		C	MAGNET ROLLER(FROM 1ST LOT)	SP2253	
30	LX-WZ0166FCZZ		AC		C	Washer		
31	PRNGP0013FCZZ		AF		C	V ring (ϕ8)		
32	PRNGP0022FCZZ		AA		C	C ring (ϕ8)		
33	XEBSD30P05000		AA		C	Screw (3×5)		
34	RDTCT0118FCZZ		AZ		B	Toner sensor		
35	DHAi-2437FCZZ		AR		C	DV harness		
36	NBRGC0377FCZZ		AD		C	Waste toner bearing		
37	XRESP40-06000		AA		C	4E-Type ring (4mm)		
38	XBBSD40P12000		AA		C	Screw (4×12)		
39	XEBSD30P08000		AA		C	Screw (3×8)		
40	LPLTM2572FCZZ		AB		C	Magnet fixing plate		
41	PCLR-0280FCZ1		AQ		C	DSD collar (Japan only)		
	PCLR-0280FCZ2		AQ		C	DSD collar (Except Japan)		
42	LPLTM2568FCZZ		AB		C	Magnet adjusting plate		
43	LX-BZ0187FCZZ		AA		C	Screw (Left type)(Red)(3×6)		
44	XBPSD40P08KS0		AA		C	Screw (4×8KS)		
45	XEBSD30P12000		AA		C	Screw (3×12)		
46	PCŌVP1296FCZZ		AL		D	DV F cover		
	PCŌVP1296FCZ1	1	AL		D	DV F COVER	SP2295	98/05/01
47	PCŌVP0799FCZ1		AL		C	DV cover U		
48	UCLEZ0077FCZZ		AG		S	DV blade		
49	PSEL-0767FCZZ		AE	N	C	DV side seal FN		
50	CBŌX-0102FC03		BA		C	DV box		
51	PSEL-0756FCZZ		AE	N	C	DV side seal RN		
52	NBRGC0180FCZZ		AN		C	Bearing		
53	XRESP70-08000		AA		C	E type ring (7mm)		
54	NGERH0479FCZZ		AB		C	DV gear 29T		
55	LX-BZ0460FCZZ		AA		C	Screw (3×8)		
56	CGERH1053FC01		AH		C	21T/32T gear		
57	NGERH1054FCZZ		AF		C	38T gear		
58	NGERH0723FCZ1		AE		C	B-CL gear 20T		
59	CCŌVP1295FC01		AP		C	DV R cover		
	CCŌVP1295FC02	1	AN		C	DV R COVER	SP2295	98/05/01
60	LX-WZ0094FCZZ		AA		C	Washer		
61	PMLT-0952FCZZ		AB		C	DV cover cushion		
62	PSHEZ3989FCZZ		AF		C	DV U sheet F		
63	PSHEZ3990FCZZ		AF		C	DV U sheet R		
64	PCLR-0447FCZZ		AE	N	C	Shaft collar		
65	PRNGP0098FCZZ		AD		C	O ring		
	(Unit)							
901	DUNT-6755FCZZ		CA		E	Developer unit (Japan only)		
	DUNT-6755FC11		CA		E	Developer unit (Except Japan)		

N :Add
:Change
:Delete
:Others

UpDate 98/06/23

20 Paper exit reversing unit

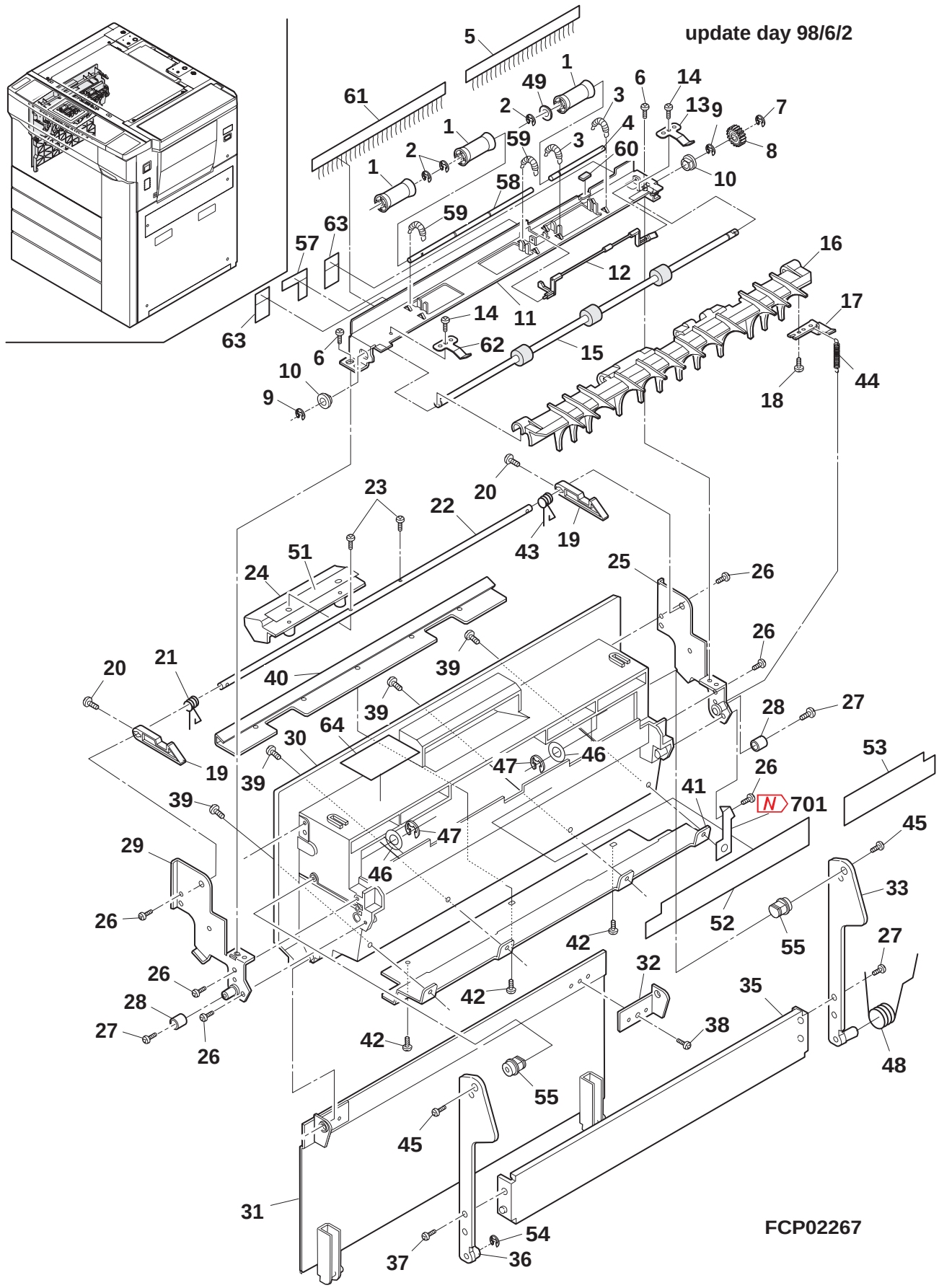

20 Paper exit reversing unit

NO.	PARTS CODE	COMPATIBLE	PRICE RANK	NEW MARK	PART RANK	DESCRIPTION	TR NO.	VALID
1	NRŌLP0937FCZ1		AC		C	Delivery roller upper (Japan,AB series)		
	NRŌLP0923FCZZ		AC		C	Delivery roller upper (Inch series)		
2	XRESP30-04000		AA		C	E type ring (3mm)		
3	MSPRT2587FCZZ		AC		C	Roller spring B		
4	NSFTZ2432FCZ1		AG	N	C	Delivery shaft A		
5	PBRSS0191FCZZ		AH	N	B	Discharge brush R		
6	XHBSE40P08000		AA		C	Screw (4×8)		
7	XRESP40-06000		AA		C	4E-Type ring (4mm)		
8	NGERH0884FCZZ		AC		C	Gear TA		
9	XRESP50-06000		AA		C	E type ring (5mm)		
10	NBRGM1040HCZZ		AC		B	Bearing		
11	PGiDH1775FCZZ		AN	N	C	Delivery paper guide		
12	MLEVP0606FCZZ		AH		C	POD actuator		
13	LFiX-0513FCZZ		AE	N	C	Upper pawl fixing plate R		
14	LX-BZ3004SC0M		AA		C	Screw (3×4)		
15	NRŌLR1070FCZ2		AR		C	Delivery roller		
16	PGiDM1604FCZZ		AT		C	Reversing gate HA		
17	LANGT1388FCZZ		AE		C	Gate angle N		
18	XEPSD30P06000		AA		C	Screw (3×6)		
19	MLEVP0594FCZ1		AD		C	Guide lock lever		
20	XBPSD30P08KS0		AA		C	Screw (3×8KS)		
21	MSPRC2360FCZZ		AD		C	Delivery lock spring F		
22	NSFTZ2168FCZZ		AN		C	Delivery exterior lock shaft		
23	XBPSD30P14K00		AA		C	Screw (3×14K)		
24	MLEVP0678FCGZ		AF		C	Lock release lever		
25	CPLTM4853FC02		AL		C	Delivery fixing plate R		
26	XEPSD40P08000		AA		C	Screw (4×8)		
27	LX-BZ0267FCZZ		AB		C	Screw		
28	NBRGC0401FCZZ		AC		C	Bearing		
29	CPLTM4854FC02		AL		C	Delivery fixing plate F		
30	GCAB-0833FCZZ		AZ		D	Delivery exterior		
31	CPLTM4975FC01		AY		C	Delivery cover plate lower		
32	LPLTM4974FCZZ		AH		C	Delivery hold plate R		
33	CPLTM4062FC02		AH		C	Fulcrum plate R		
35	LSTYM0184FCZZ		AL		C	Fulcrum plate stay		
36	CPLTM4062FC01		AH		C	Fulcrum plate F		
37	XBPSD40P08K00		AA		C	Screw (4×8K)		
38	XBPSD40P05K00		AA		C	Screw (4×5K)		
39	LX-BZ0611FCZZ		AB		C	Screw		
40	LPLTM4971FCZZ		AN		C	Delivery tray reinforce plate B		
41	LPLTM4970FCZZ		AQ		C	Delivery tray reinforce plate A		
42	XBBSD40P10000		AA		C	Screw (4×10)		
43	MSPRC2361FCZZ		AD		C	Delivery lock spring R		
44	MSPRC2359FCZZ		AD		C	Gate spring		
45	XBPSD30P08KS0		AA		C	Screw (3×8KS)		
46	LX-WZ0052FCZZ		AA		C	Washer		
47	XRESP40-06000		AA		C	E type ring (4mm)		
48	MSPRC1650FCZZ		AC		C	PC pressure spring F		
49	LX-WZ0139FCZZ		AA		C	Washer (ϕ5-12)		
51	PSPAZ0671FCZZ		AP		C	Spacer for lever		
52	PSHEP3971FCZZ		AF		C	Delivery exterior sheet F		
53	PSHEP3972FCZZ		AE		C	Delivery exterior sheet R		
54	PRNGP0090FCZZ		AA		C	Ring (E5)		
55	LBŌSZ1704FCZZ		AW		C	Delivery boss		
57	PSHEP3928FCZZ		AC		C	Sheet (Inch series)		
58	NSFTZ2433FCZ1		AK	N	C	Delivery shaft B		
59	MSPRT2586FCZZ		AC		C	Roller spring A		
60	PSHEZ3838FCZZ		AB		C	POD actuator sheet		
61	PBRSS0190FCZZ		AK	N	B	Discharge brush F		
62	LFiX-0512FCZZ		AE	N	C	Upper pawl fixing plate F		
63	PSHEZ4497FCZZ		AC	N	C	Delivery sheet (Japan,AB series)		
64	TCAUH0960FCZZ		AB		C	High temperature caution label (Japan only)		
	TCAUH0961FCZZ		AB		C	High temperature caution label (U,Kingdom,Australia,New Zealand)		
	TCAUH1005FCZZ		AF		C	High temperature caution label (Other countries)		
701	N PSHEZ4590FCZZ		AF	N		DELIVERY EARTH SHEET(FROM 1ST LOT)	SP2266	

21 Transport upper unit

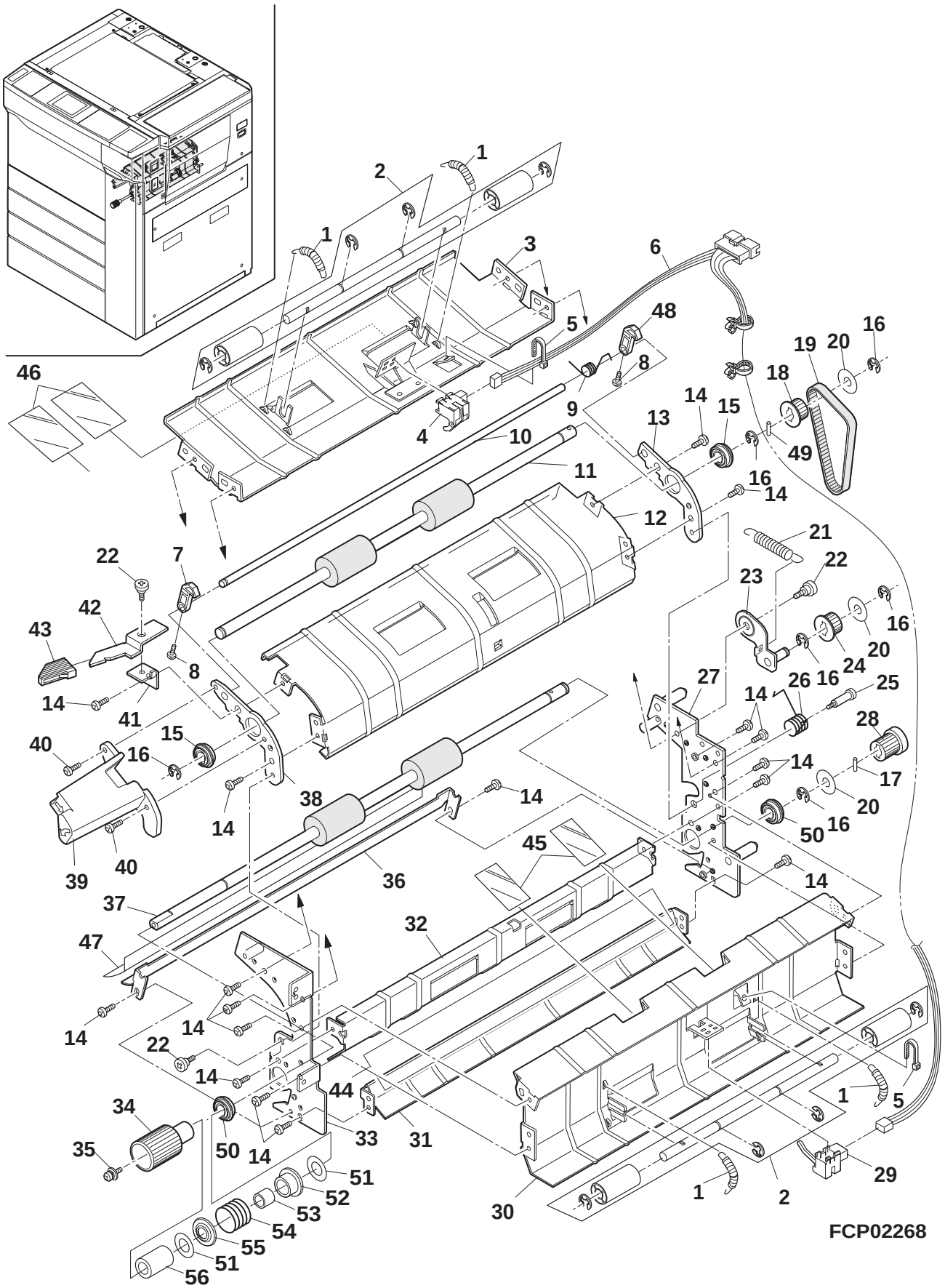

21 Transport upper unit

NO.	PARTS CODE	COMPATIBLE	PRICE RANK	NEW MARK	PART RANK	DESCRIPTION	TR NO.	VALID
1	MSPRC1654FCZZ		AC		C	PS spring		
2	CRŌLP0945FC32		AS		E	Transport roller unit		
3	CGiDH1549FC02		AQ		C	Transport upper paper guide A		
4	QSW-Z0419FCZZ		AM		B	Detect sensor N		
5	LBNDJ0013FCZ1		AA		C	Wire band		
6	DHAi-2448FCZZ		AL		C	PPD1,2 harness		
7	PTME-0242FCZZ		AD		C	Transport lock pawl		
8	XBPSD30P06KS0		AA		C	Screw (3×6KS)		
9	MSPRC2302FCZZ		AD		C	Transport lock spring		
10	NSFTZ2167FCZZ		AP		C	Transport lock shaft		
11	NRŌLR1065FCZZ		AU		C	Transport upper roller 2		
12	PGiDH1550FCZ1		AQ		C	Transport upper paper guide B		
13	LFRM-0851FCZZ		AE		C	Transport sub frame R		
14	XHBSE40P08000		AA		C	Screw (4×8)		
15	NBRGY0466FCZZ		AK		B	Ball bearing (φ8-φ16)		
16	XRESP70-08000		AA		C	E type ring (7mm)		
17	LPiNS0155FCZZ		AA		C	Pin (φ3-10)		
18	NPLYZ0260FCZZ		AC		C	Pulley 17P-A		
19	NBLTH0255FCZZ		AK		B	Transport upper drive belt		
20	PSHEP3835FCZZ		AC		C	Flange sheet		
21	MSPRT2303FCZZ		AC		C	Pulley tension spring		
22	LX-BZ0546FCZZ		AC		C	Screw		
23	CPLTM4843FC01		AG		C	Pulley fixing plate		
24	NPLYZ0302FCZZ		AH		C	Pulley 18T		
25	LX-BZ0489FCZZ		AB		C	Mirror base fixing screw		
26	MSPRC2323FCZZ		AD		C	Paper guide return spring		
27	CFRM-0849FC01		AN		C	Transport upper frame R		
28	NPLYZ0304FCZZ		AF		C	Pulley 17		
29	QSW-Z0457FCZZ		AP		B	DGD1 switch		
30	PGiDH1551FCZ1		AS		C	Transport upper paper guide C		
31	PGiDH1553FCZ1		AM		C	Transport upper paper guide E		
32	PGiDH1552FCZ1		AL		C	Transport upper paper guide D		
33	CFRM-0848FC01		AL		C	Transport upper frame F		
34	JKNBP0084FCGZ		AD		C	Transport knob		
35	XBPSD40P10KS0		AA		C	Screw (4×10KS)		
36	PGiDH1554FCZ1		AH		C	Transport upper paper guide F		
37	NRŌLR1064FCZZ		AV		C	Transport upper roller 1		
38	LFRM-0850FCZZ		AE		C	Transport sub frame F		
39	MLEVP0683FCZZ		AK		C	Transport lever		
40	XHBSE40P10000		AA		C	Screw (4×10)		
41	LPLTM4844FCZZ		AE		C	Open and shut lever fixing plate		
42	MLEVF0676FCZZ		AC		C	Open and shut lever		
43	JHNDP0128FCZZ		AD		C	Transport handle		
44	PSHEP3916FCZZ		AU		C	Paper guide E sheet		
45	PSHEP3917FCZZ		AG		C	Paper guide sheet		
46	PSHEZ3888FCZZ		AG		C	Paper guide A sheet		
47	PSHEP3887FCZZ		AS		C	Paper guide B sheet		
48	PTME-0245FCZZ		AD		C	Transport lock pawl R		
49	LPiNS0264FCZZ		AB		C	Spring pin (φ3-9.5)		
50	NBRGY0548FCZZ		AR		B	Bearing		
51	LX-WZ0070FCZZ		AA		C	Washer		
52	PCLR-0387FCZZ		AB		C	Brake collar		
53	NBRGC0401FCZ1		AD		C	Bearing		
54	MSPRC2231FCZZ		AC		C	Drive brake spring		
55	PSPAZ0095FCZZ		AB		C	Clutch spacer		
56	NBRGC0101FCZ1		AF		C	Bearing		

22 Vertical transport unit 1

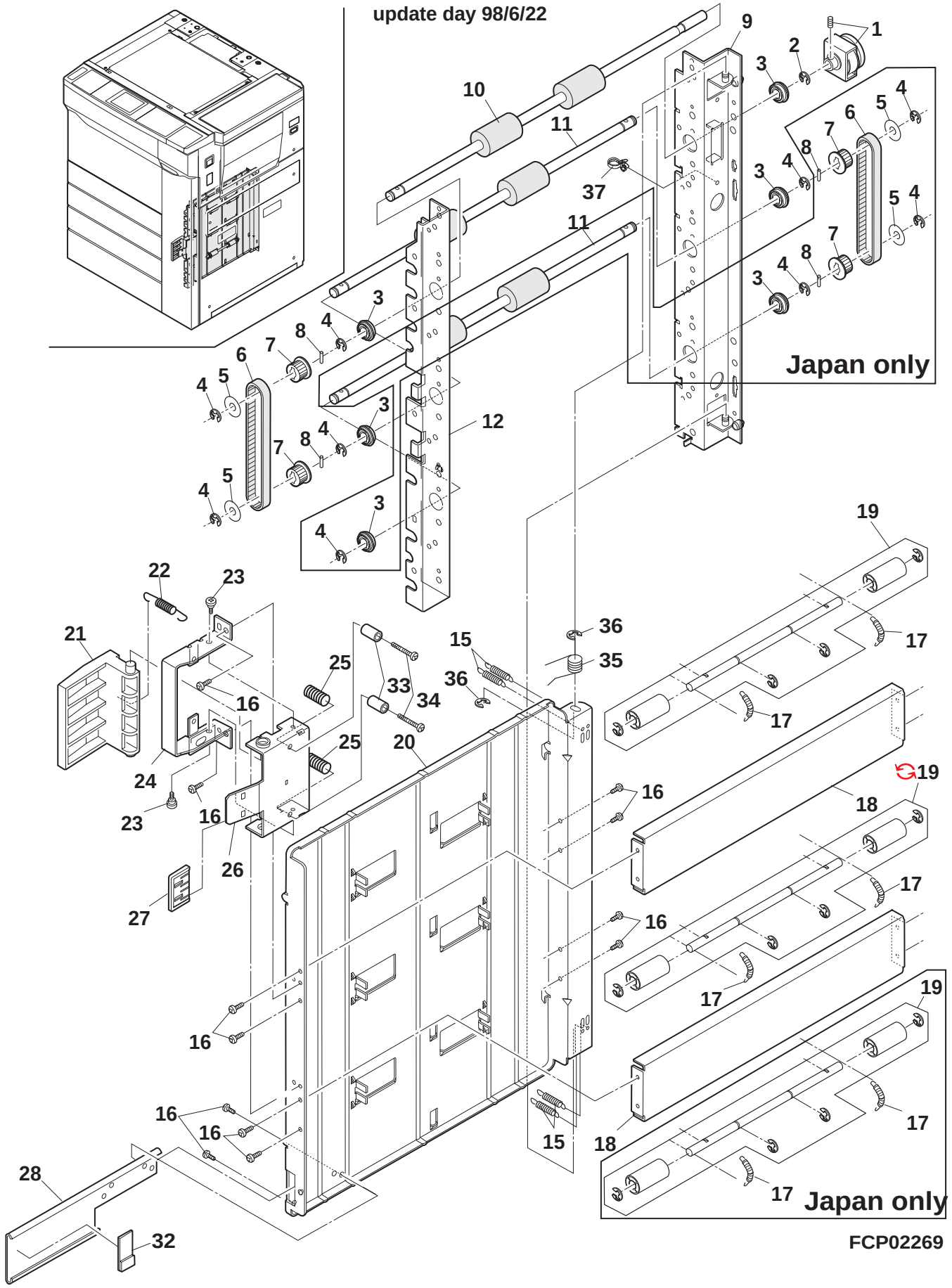

22 Vertical transport unit 1

NO.	PARTS CODE	COMPATIBLE	PRICE RANK	NEW MARK	PART RANK	DESCRIPTION	TR NO.	VALID
1	PCLC-0249FCZZ		AX		B	Transport joint clutch		
2	XRESP60-08000		AA		C	E type ring (6mm)		
3	NBRGY0466FCZZ		AK		B	Ball bearing (φ8-φ16)		
4	XRESP70-08000		AA		C	E type ring (7mm)		
5	PSHEP3798FCZZ		AC		C	Sheet		
6	NBLTH0256FCZZ		AL		B	Transport belt		
7	NPLYZ0265FCZZ		AC		C	Transport pulley		
8	LPiNS0155FCZZ		AA		C	Pin (φ3-10)		
9	CFRM-0853FC01		AS		C	Vertical transport frame R		
10	NRŌLR1066FCZZ		AV		C	Vertical transport roller 1		
11	NRŌLR1067FCZZ		AU		C	Vertical transport roller 2		
12	CFRM-0852FC01		AP		C	Vertical transport frame F		
15	MSPRC2305FCZZ		AC		C	Paper guide pressure spring R		
16	XHBSE40P08000		AA		C	Screw (4×8)		
17	MSPRT2040FCZZ		AB		C	Transport spring A		
18	LPLTM4906FCZ1		AL		C	Vertical transport plate		
19	CRŌLP0945FC32		AS		E	Transport roller unit		
20	PGiDH1557FCZ1		AY		C	Vertical transport paper guide outside		
21	PTME-0243FCZZ		AH		C	Paper guide lock pawl		
22	MSPRC2307FCZZ		AC		C	Lock pawl spring		
23	LX-BZ0295FCZ1		AC		C	Screw		
24	LPLTM4846FCZZ		AH		C	Paper guide lock plate		
25	MSPRC2304FCZ1		AC		C	Paper guide pressure spring F		
26	LPLTM4845FCZZ		AH		C	Lock shaft fixing plate		
27	JHNDP0096FCGZ		AD		C	Lever handle		
28	LANGT1387FCZZ		AH		C	PG angle		
32	PCUSG0330FCZZ		AE		C	PG Cushion		
33	PCLR-0406FCZZ		AB		C	PG lock collar		
34	XBPSD40P20KS0		AA		C	Screw (4×20KS)		
35	MSPRC2372FCZZ		AD		C	Vertical tranport spring		
36	XRESP50-06000		AA		C	E type ring (5mm)		
37	LBNDJ0043FCZ1		AA		C	Snap band (SG-130)		

N :Add
:Change
:Delete
:Others

UpDate 98/07/29

23 Vertical transport unit 2

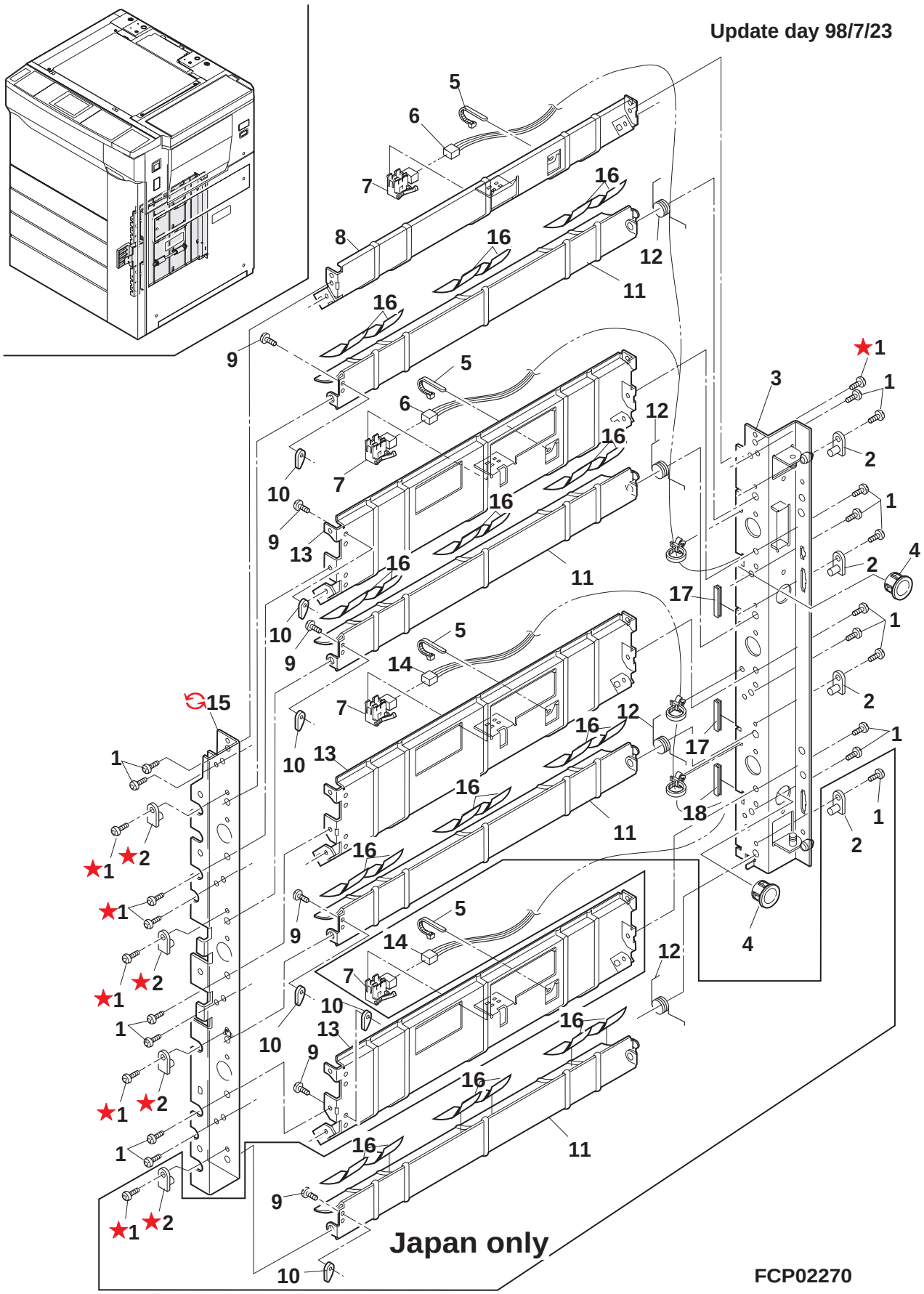

23 Vertical transport unit 2

NO.	PARTS CODE	COMPATIBLE	PRICE RANK	NEW MARK	PART RANK	DESCRIPTION	TR NO.	VALID
1	XHBSE40P08000		AA		C	Screw (4×8)		
	☆ XHBSE40P08000	5	AA		C	SCREW(M4×8)(Q'TY:-4)	SP2310	98/06/01
2	LPLTP3108FCZZ		AB		C	PF rotation plate		
	☆ LPLTP3108FCZZ	5	AB		C	PF ROTATION PLATE(Q'TY:-4)	SP2310	98/06/01
3	CFRM-0853FC01		AS		C	Vertical transport frame R		
4	LBSHC2018SCZZ		AC		C	Bushing (TB1520)		
5	LBNDJ0013FCZ1		AA		C	Wire band		
6	DHAi-2442FCZZ		AL		C	Vertical transport U harness		
7	QSW-Z0464FCZZ		AQ		B	FPPD switch		
8	PGiDH1558FCZ1		AL		C	Vertical transport paper guide upper		
9	XEPSD30P06000		AA		C	Screw (3×6)		
10	LHLDZ1267FCZZ		AD		C	PG holder		
11	PGiDH1555FCZ1		AL		C	Vertical transport rotation paper guide		
12	MSPRC2306FCZZ		AC		C	Paper guide pressure spring C		
13	PGiDH1556FCZ1		AN		C	Vertical transport paper guide inner		
14	DHAi-2443FCZZ		AM		C	Vertical transport L harness (Japan only)		
	DHAi-2444FCZZ		AK		C	Vertical transport L harness (Export)		
15	CFRM-0852FC01		AP		C	Vertical transport frame F		
	♻ CFRM-0852FC02	5	AN		C	VERICAL TRANSPORT FRAME F	SP2310	98/06/01
16	PSHEZ3889FCZZ		AC		C	Sheet		
17	PHŌG-0395FCZZ		AB		C	Edge protect A (Japan only)		
18	PHŌG-0396FCZZ		AB		C	Edge protect B (Japan only)		

N :Add
:Change
:Delete
:Others

UpDate 98/06/23

24 PS Transport unit

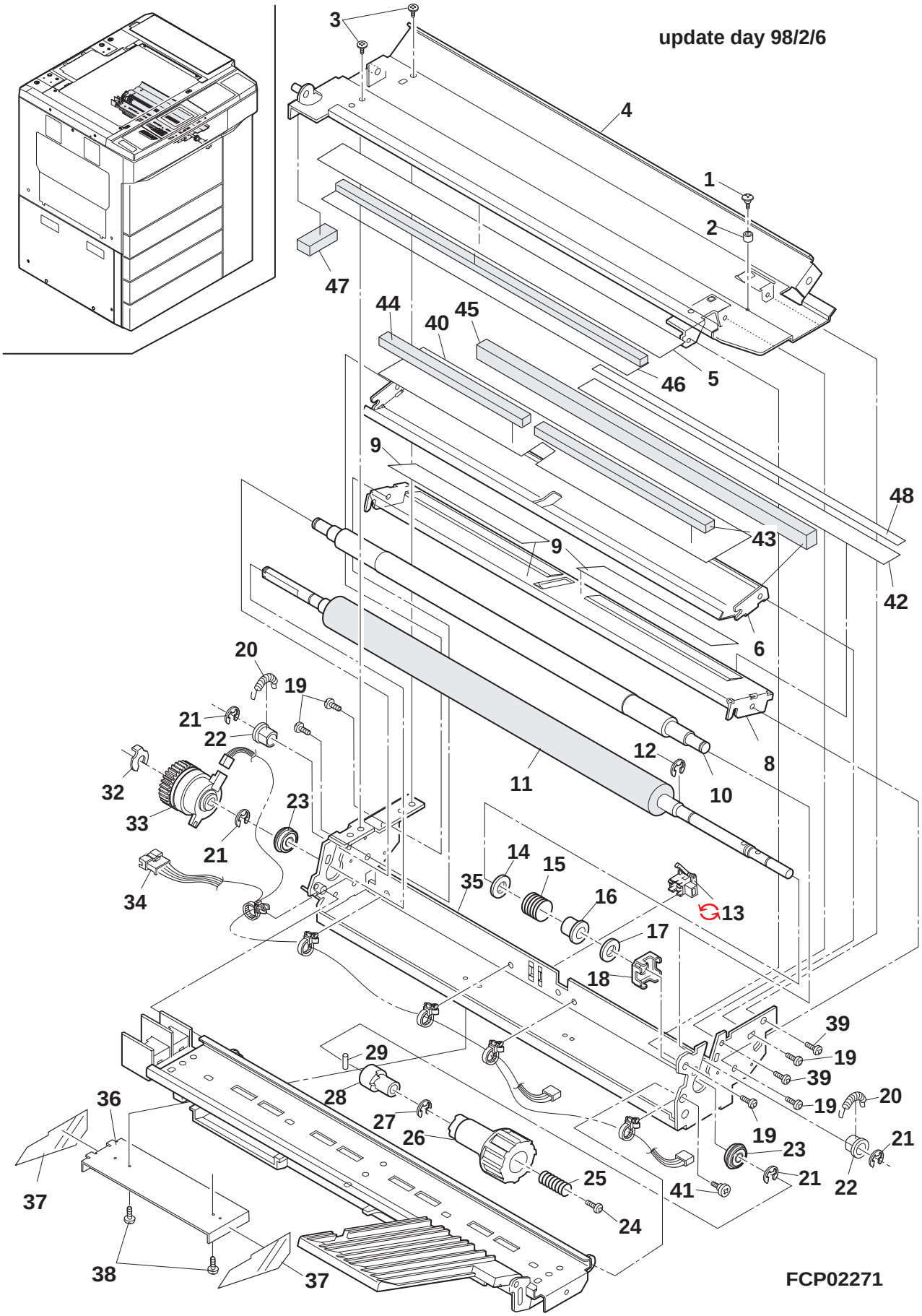

24 PS Transport unit

NO.	PARTS CODE	COMPATIBLE	PRICE RANK	NEW MARK	PART RANK	DESCRIPTION	TR NO.	VALID
1	LX-BZ0373FCZZ		AA		C	Screw (M3)		
2	PSPAZ0608FCZZ		AB		C	DV spacer		
3	LX-BZ0465FCZZ		AA		C	Screw (4×6)		
4	CGiDH1561FC02		AU		C	DV guide HA		
5	PSHEP3800FCZZ		AF		C	Transcription front guide sheet		
6	PGiDH1605FCZ1		AK		C	PS front paper guide upper		
8	PGiDH1560FCZ1		AM		C	PS front paper guide lower		
9	PSHEP3918FCZZ		AN		C	Resist sheet		
10	NRŌLP1068FCZZ		BA		C	PS roller upper		
11	NRŌLR1069FCZZ		BA		C	PS roller lower		
12	XRESP90-08000		AA		C	E type ring (9mm)		
13	QSW-Z0492FCZZ		AR		B	Detect sensor N		
	♻ QSW-Z0517FCZZ	3	AR		B	DETECT SENSOR N(FROM 1ST LOT)	SP2234	
14	LX-WZ0112FCZZ		AA		C	Washer		
15	MSPRC2371FCZZ		AD		C	PS brake sprng		
16	PCLR-0387FCZZ		AB		C	Brake collar		
17	LX-WZ0172FCZZ		AB		C	Washer		
18	LPLTM4848FCZZ		AD		C	Brake plate		
19	XHBSE40P08000		AA		C	Screw (4×8)		
20	MSPRT2042FCZZ		AD		C	PS spring		
21	XRESP70-08000		AA		C	E type ring (7mm)		
22	NBRGC0037FCZ1		AC		C	Bearing B		
23	NBRGY0548FCZZ		AR		B	Ball bearing		
24	LX-BZ0711FCZZ		AA		C	Screw (3×8)		
25	MSPRC1954FCZ1		AC		C	Ratchet spring		
26	JKNBP0121FCZZ		AE		C	Fusing knob		
27	XRESP50-06000		AA		C	E type ring (5mm)		
28	LDAiU0450FCZZ		AB		C	Ratchet block		
29	LPiNS0096FCZZ		AB		C	Pin (φ3-12)		
32	LSTPP0279FCZZ		AB		C	Stopper		
33	PCLC-0239FCZ1		BA		B	PS transport clutch		
34	DHAi-2449FCZZ		AM		C	PS transport harness		
35	CFRM-0854FC01		AR		C	PS transport frame		
36	PGiDH1624FCZZ		AG		C	ADU upper guide		
37	PSHEP3978FCZZ		AD		C	ADU upper guide sheet		
38	XHBSD30P06000		AA		C	Screw (3×6)		
39	XBBSD40P08000		AA		C	Screw (4×8)		
40	PSHEP3880FCZZ		AH		C	PS trasport sheet		
41	LX-BZ0546FCZZ		AC		C	Screw		
42	PSHEZ3921FCZZ		AQ		C	PS transport sheet lower		
43	PMLT-1002FCZZ		AF		C	Protection cushion A		
44	PMLT-1003FCZZ		AF		C	Protection cushion B		
45	PMLT-1004FCZZ		AG		C	Protection cushion C		
46	PMLT-1146FCZZ		AF	N	C	DV guide cushion L		
47	PMLT-1015FCZZ		AE		C	DV guide cushion		
48	PSHEP4014FCZZ		AD		C	PS front assistance sheet		
	(Unit)							
901	CFRM-0854FC31		BT		E	PS transport unit		

25 TC guide unit

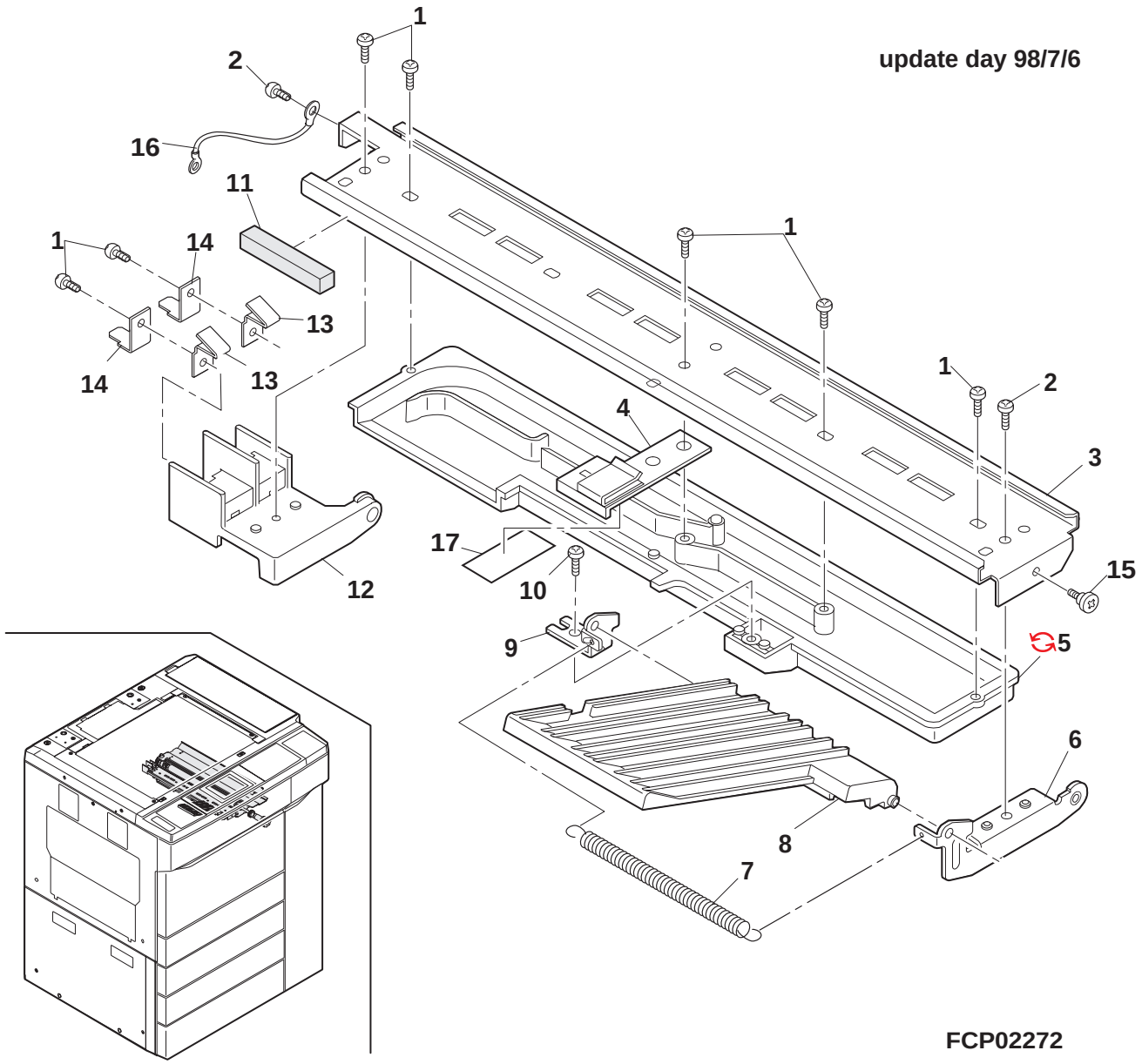

25 TC guide unit

NO.	PARTS CODE	COMPATIBLE	PRICE RANK	NEW MARK	PART RANK	DESCRIPTION	TR NO.	VALID
1	XEPSD40P10000		AA		C	Screw (4×10)		
2	XBPSD40P08000		AA		C	Screw (4×8)		
3	LRALM0120FCZ1		AK		C	TC guide rail		
4	CSPRP1932FC01		AE		C	Suction lift plate spring		
5	PDUC-0098FCZZ		AL		C	TC duct		
	♻ PDUC-0098FCZ1	1	AK		C	TC DUCT	SP2294	98/05/01
6	LPLTM4850FCZZ		AF		C	Guide rail fixing plate F		
7	MSPRT1938FCZZ		AB		C	Suction plate F spring		
8	LPLTP4852FCZZ		AV		C	Suction plate F		
9	LPLTM4851FCZZ		AE		C	Guide rail fixing plate R		
10	XEPSD40P06000		AA		C	Screw (4×6)		
11	PMLT-0968FCZZ		AC		C	TC cushion		
12	LHLDZ1246FCZZ		AH		C	TC electrode holder		
13	QSLP-0155FCZZ		AB		C	TC electrode		
14	LPLTM4979FCZZ		AD		C	Terminal fixing plate		
15	LX-BZ0546FCZZ		AC		C	Screw		
16	DHAi-2547FCZZ		AE		C	TC earth harness		
17	PSHEP4031FCZZ		AD		C	Lift sheet		

N :Add
:Change
:Delete
:Others

UpDate 98/07/13

26 Transport base plate unit

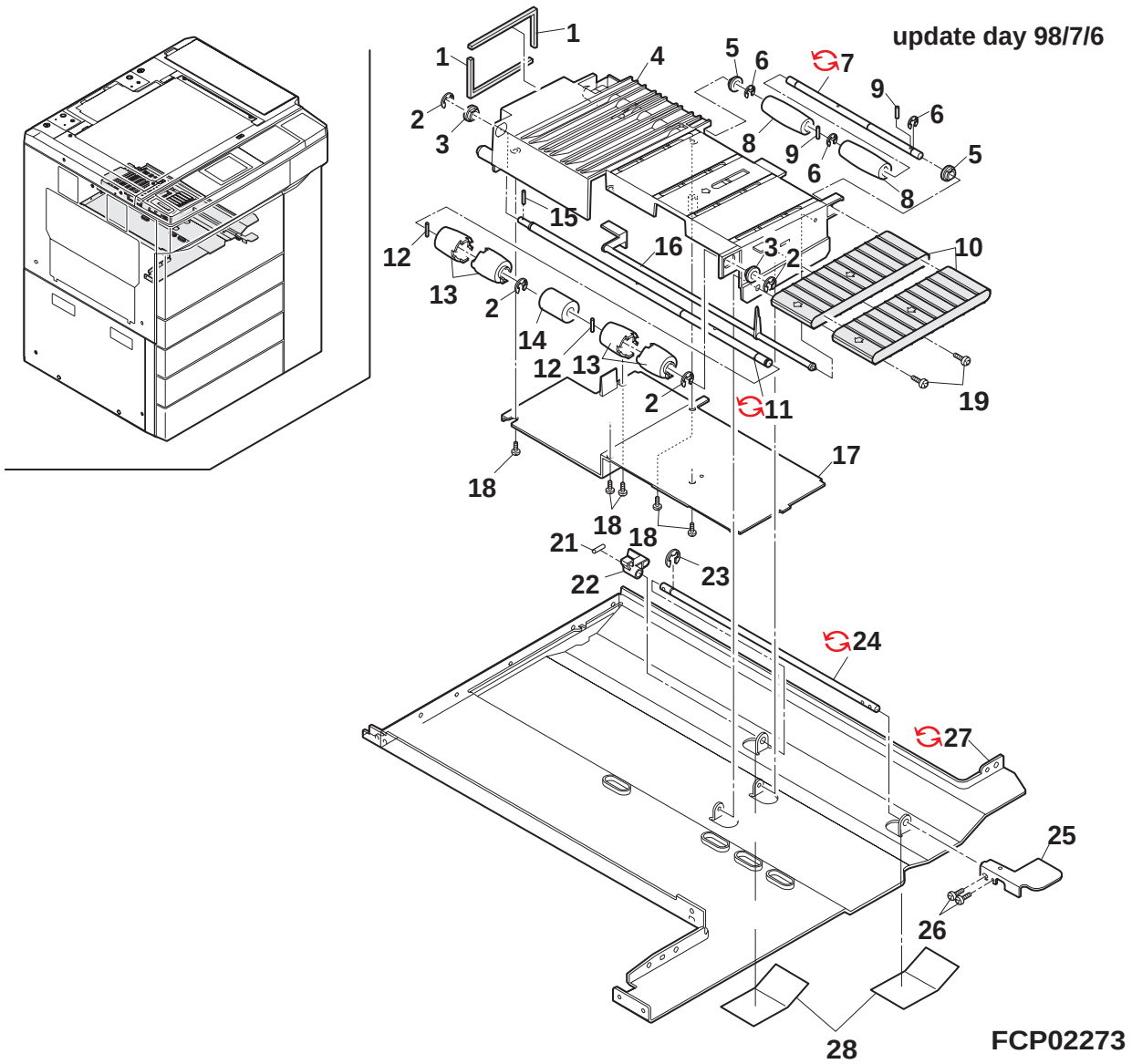

26 Transport base plate unit

NO.	PARTS CODE	COMPATIBLE	PRICE RANK	NEW MARK	PART RANK	DESCRIPTION	TR NO.	VALID
1	PMLT-0964FCZZ		AC		C	Suction cushion		
2	XRESP70-08000		AA		C	E type ring (7mm)		
3	NBRGC0080FCZZ		AD		C	DFC bearing		
4	LPLTP4815FCZZ		AR		C	Suction plate		
5	NBRGM1040HCZZ		AC		B	Bearing		
6	XRESP50-06000		AA		C	E type ring (5mm)		
7	NSFTZ2140FCZZ		AL		C	Suction shaft		
	NSFTZ2140FCZ1	1	AL		C	SUCTION SHAFT	SP2260	98/02/01
8	NRŌLP0833FCZ1		AC		C	Belt roller		
9	LPiNS0133FCZZ		AA		C	Pin (φ2-10)		
10	NBLTH0251FCZZ		AL		B	Suction belt		
11	NSFTZ2138FCZZ		AQ		C	Suction drive shaft		
	NSFTZ2138FCZ1	1	AP		C	SUCTION DRIVE SHAFT	SP2260	98/02/01
12	LPiNS0155FCZZ		AA		C	Pin (φ3-10)		
13	NRŌLP1010FCZZ		AC		C	Suction drive roller		
14	NRŌLS0612FCZZ		AE		C	Suction sponge roller		
15	LPiNS5016SCZZ		AA		C	Spring pin		
16	MLEVP0675FCZZ		AR		C	PSD actuator		
17	LPLTP4816FCZZ		AM		C	Suction plate lower		
18	XEBSD40P10000		AA		C	Screw (4×10)		
19	XBPSD40P10000		AA		C	Screw (4×10)		
21	LPiNS0096FCZZ		AB		C	Pin (φ3-12)		
22	PGiDM1600FCZZ		AE		C	Suction lift guide		
23	XRESP50-06000		AA		C	E type ring (5mm)		
24	NSFTZ2139FCZ1		AP		C	Suction lift shaft		
	NSFTZ2139FCZ2	1	AQ		C	SUCTION LIFT SHAFT	SP2260	98/02/01
25	MLEVP0689FCZZ		AH		C	Suction lift lever		
26	XBPSD30P10KS0		AB		C	Screw (3×10KS)		
27	LDAiU0511FCZZ		BE		C	Transport base plate		
	LDAiU0511FCZ1	1	AV		C	TRANSPORT BASE PLATE	SP2295	98/05/01
28	PSHEZ3961FCZZ		AC		C	Transport shield sheet		

27 Curl correction unit

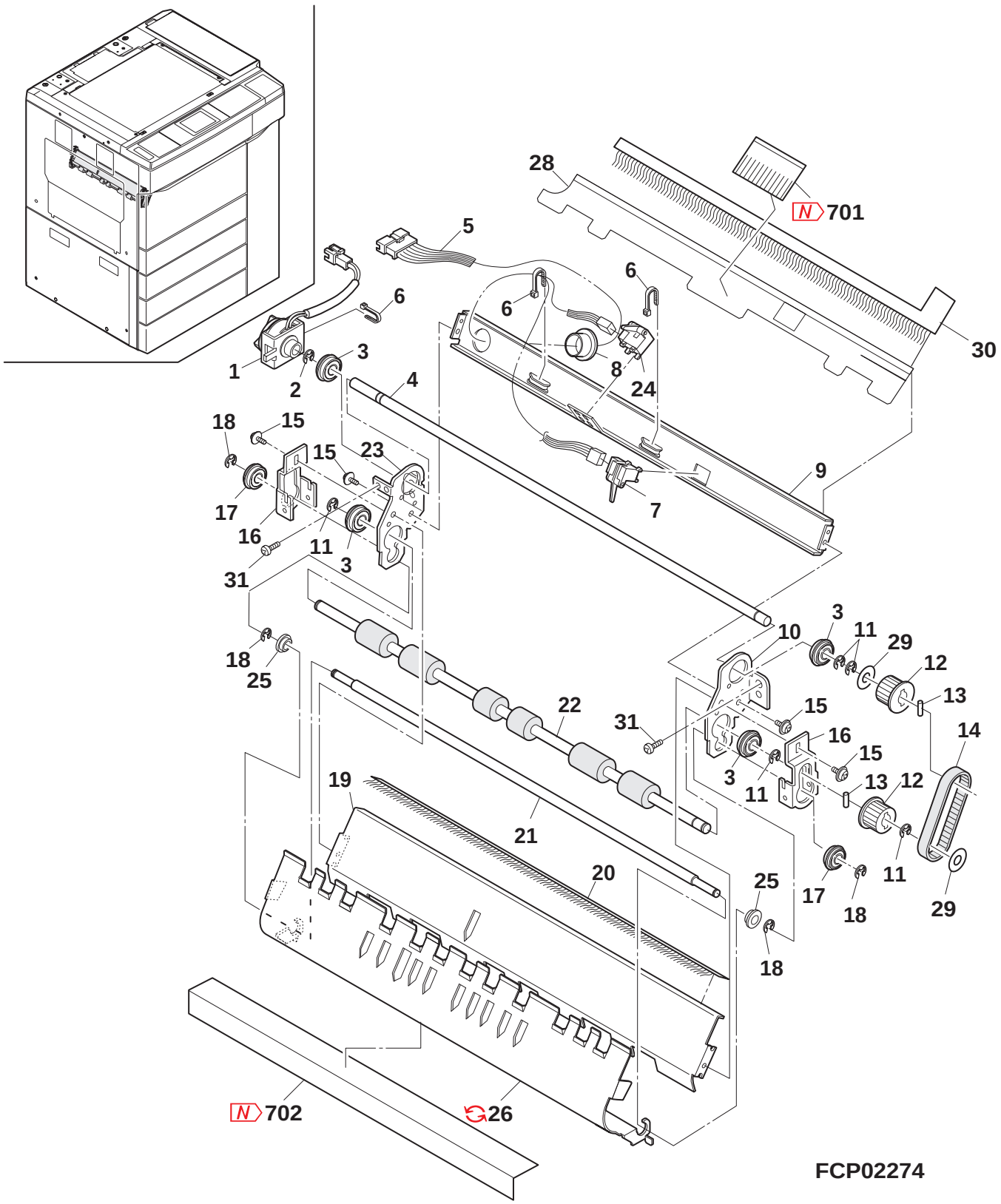

27 Curl correction unit

NO.	PARTS CODE	COMPATIBLE	PRICE RANK	NEW MARK	PART RANK	DESCRIPTION	TR NO.	VALID
1	PCLC-0247FCZZ		AX		B	Curl correction clutch		
2	XRESP60-07000		AA		C	E type ring (6mm)		
3	NBRGY0466FCZZ		AK		B	Ball bearing (φ8-φ16)		
4	NSFTZ2201FCZZ		AP		C	Curl correction drive shaft		
5	DHAi-2446FCZZ		AL		C	Turn unit harness		
6	LBNDJ0013FCZ1		AA		C	Wire band		
7	QSW-Z0464FCZZ		AQ		B	FPPD switch		
8	LBSHC0319FCZZ		AC		C	Bushing (TB1216)		
9	LSTYM0214FCZ1		AL		C	Turn over stay		
10	LFRM-0873FCZ1		AF		C	Turn over frame F		
11	XRESP70-08000		AA		C	E type ring (7mm)		
12	NPLYZ0147FCZZ		AB		C	28MXL pulley (28MXL)		
13	LPiNS0096FCZZ		AB		C	Pin (φ3-12)		
14	NBLTH0260FCZZ		AH		B	Curl correction drive belt		
15	LX-BZ3006SC0M		AA		C	Screw (3×6)		
16	LPLTM4946FCZZ		AF		C	Roller support plate		
17	NBRGY0527FCZZ		AM		B	Ball bearing		
18	XRESP50-06000		AA		C	E type ring (5mm)		
19	PGiDH1595FCZ2		AM		C	Turn over paper guide		
20	PBRSR0148FCZ1		AL		B	Discharge brush		
21	NRŌLM1091FCZ1		AT		C	Curl roller		
22	NRŌLR1090FCZ1		BC		C	Turn over roller (Japan,AB series)		
	NRŌLR1108FCZZ		BA		C	Turn over roller (Inch series)		
23	LFRM-0874FCZ1		AF		C	Turn over frame R		
24	QSW-Z0493FCZZ		AR		B	Actuator sensor		
25	NBRGY2095SCZB		AB		B	Bearing		
26	PGiDH1618FCZ2		AP		C	Turn over paper guide upper		
	PGiDH1618FCZ3	3	AP		C	TURN OVER PAPER GUIDE UPPER(FROM 1ST LOT)	SP2244	
	CGiDH1618FC01	3	AT		C	TURN OVER PAPER GUIDE UPPER AS	SP2261	98/01/01
28	PSHEP3881FCZZ		AE		C	Curl correction sheet (Japan,AB series)		
	PSHEP4005FCZZ		AF		C	Curl correction sheet (Inch series)		
29	PSHEP3835FCZZ		AC		C	Flange sheet		
30	PBRSR0149FCZZ		AL		B	Turn over discharge brush		
31	XBBSD40P06000		AA		C	Screw (4×6)		
701	N PSHEP4585FCZZ	6	AC	N		KNOCKOUT SHEET, REAR END(FROM 1ST LOT)	SP2244	
702	N PSHEP4581FCZZ	6	AG	N		CURL CORRECTING PG SHEET(FROM 1ST LOT)	SP2244	

28 LCC Transport unit

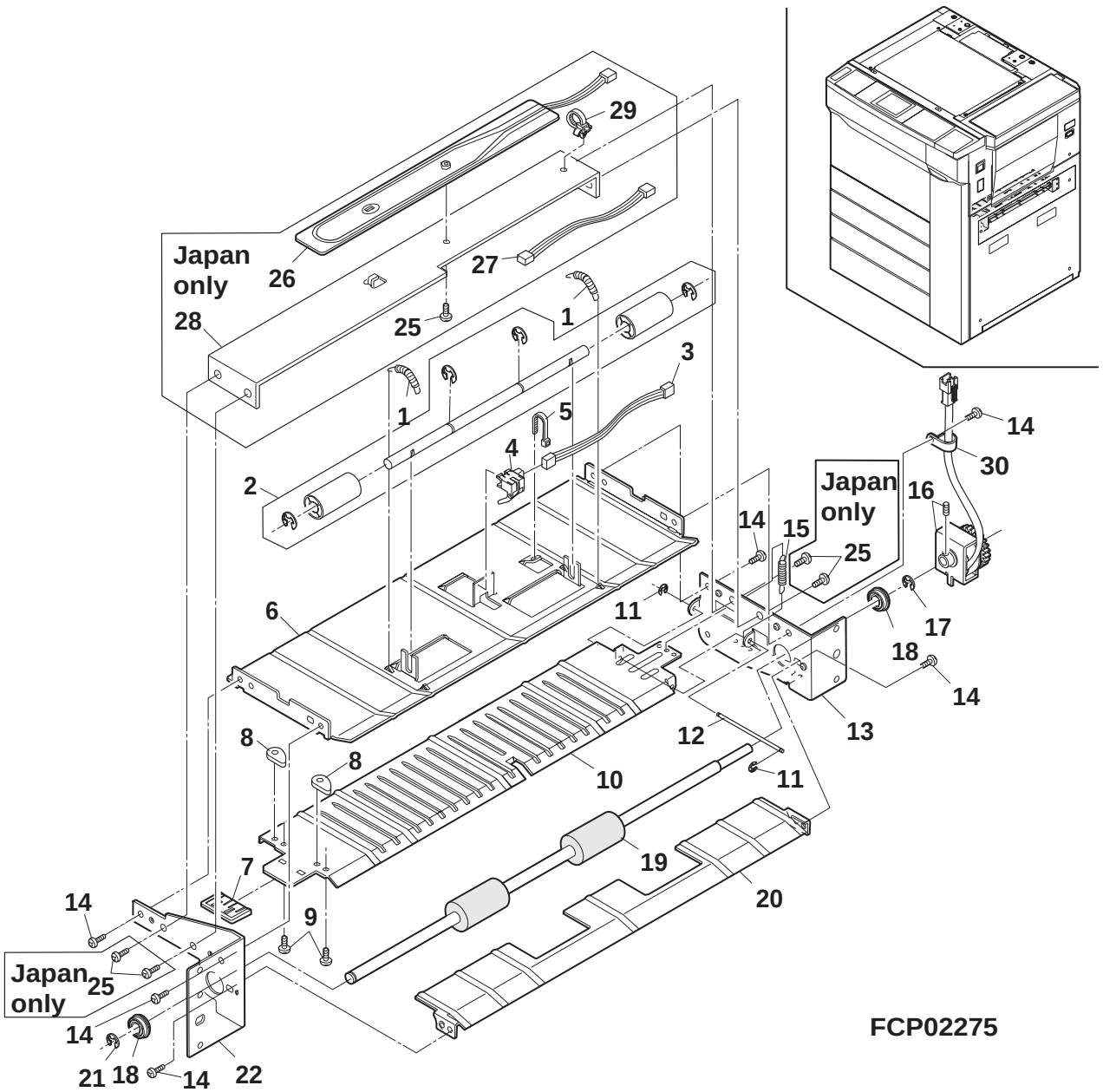

28 LCC Transport unit

NO.	PARTS CODE	COMPATIBLE	PRICE RANK	NEW MARK	PART RANK	DESCRIPTION	TR NO.	VALID
1	MSPRC1654FCZZ		AC		C	PS roller spring		
2	CRŌLP0945FC32		AS		E	Transport roller unit		
3	DHAi-2450FCZZ		AH		C	PFDL2 interface harness		
4	QSW-Z0457FCZZ		AP		B	DGD1 switch		
5	LBNDJ0013FCZ1		AA		C	Wire band		
6	PGiDH1563FCZ1		AN		C	Paper guide A		
7	JHNDP0096FCGZ		AD		C	Lever handle		
8	LHLDZ1267FCZZ		AD		C	Paper guide holder		
9	XEPSD30P06000		AA		C	Screw (3×6)		
10	PGiDH1565FCZ1		AN		C	Paper guide C		
11	XRESP20-03000		AA		C	E type ring (2mm)		
12	NSFTZ2170FCZZ		AF		C	Paper guide fulcrum shaft		
13	CFRM-0856FC01		AK		C	Frame R		
14	XHBSE40P08000		AA		C	Screw (4×8)		
15	MSPRT2308FCZZ		AD		C	Pressure spring		
16	PCLC-0240FCZZ		AX		B	Roller clutch		
17	XRESP60-08000		AA		C	E type ring (6mm)		
18	NBRGY0466FCZZ		AK		B	Ball bearing (ϕ8-ϕ16)		
19	NRŌLR1071FCZ1		AT		C	Roller LCC		
20	PGiDH1564FCZ1		AL		C	Paper guide B		
21	XRESP70-08000		AA		C	E type ring (7mm)		
22	LFRM-0855FCZZ		AF		C	Frame F		
25	XHBSE40P08000		AA		C	Screw (4×8)(Japan only)		
26	RHETP0056FCZZ		AW		B	Dry heater 1 (Japan only)		
27	DHAi-2469FCZZ		AG		C	Dry heater interface harness (Japan only)		
28	LPLTM4905FCZZ		AH		C	Heater fixing plate (Japan only)		
29	LBNDJ0043FCZ1		AA		C	Snap band (SG-130)(Japan only)		
30	LHLDW0006SCZZ		AB		C	Wire holder (NK-3N)		
	(Unit)							
901	CFRM-0856FC31		BQ		E	LCC transport unit (Japan only)		
	CFRM-0856FC32		BN		E	LCC transport unit (Except Japan)		

29 Main drive unit

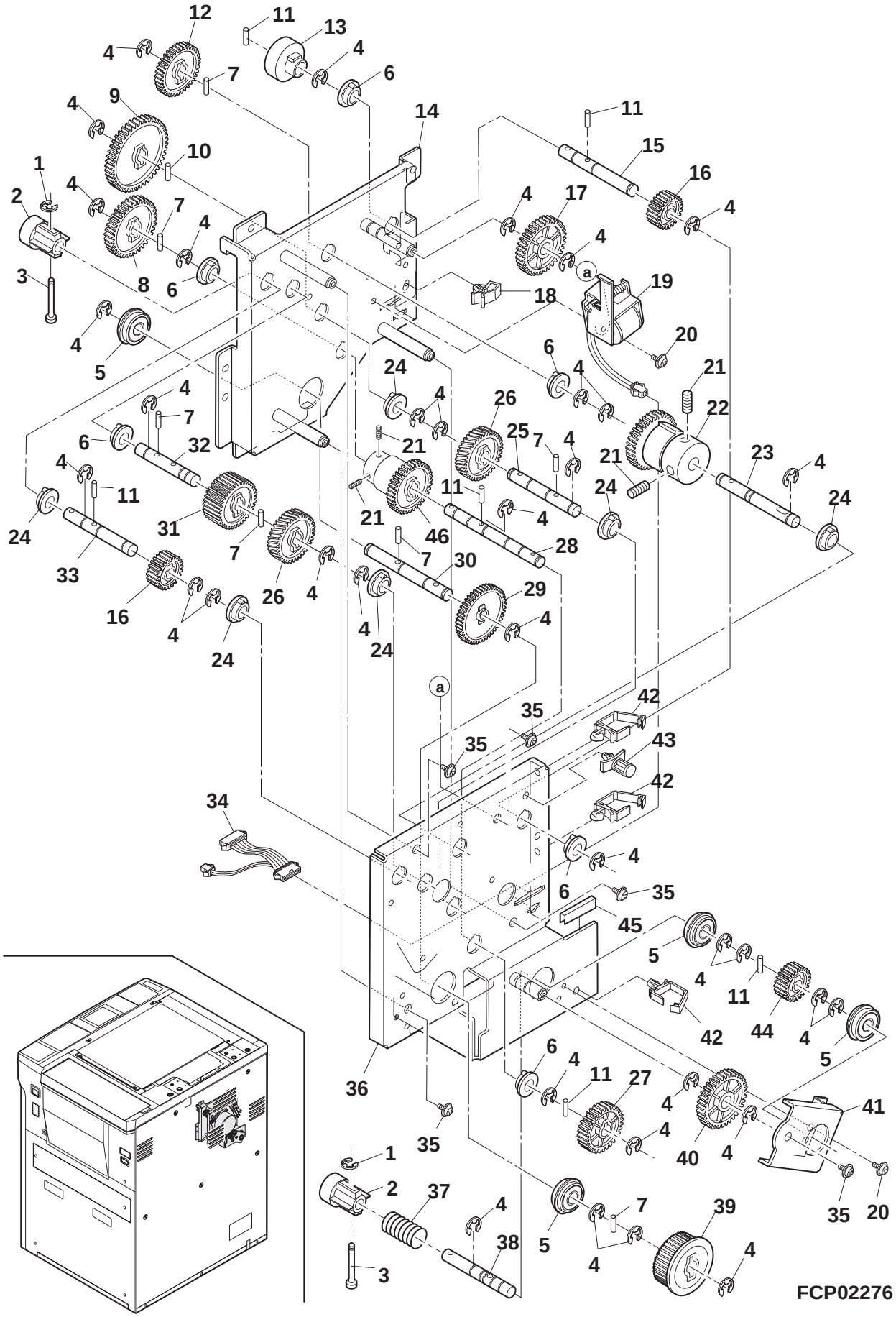

29 Main drive unit

NO.	PARTS CODE	COMPATIBLE	PRICE RANK	NEW MARK	PART RANK	DESCRIPTION	TR NO.	VALID
1	XRESP20-03000		AA		C	E type ring (2mm)		
2	PCLC-0190FCZZ		AC		B	Rotary joint clutch		
3	LPiNS0268FCZZ		AB		C	CL pin (φ3)		
4	XRESP70-08000		AA		C	E type ring (7mm)		
5	NBRGY0131FCZZ		AM		B	Bearing (with φ22 E ring)		
6	NBRGC0133FCZZ		AC		B	PF bearing (φ8)		
7	LPiNS0096FCZZ		AB		C	Pin (φ3-12)		
8	NGERH0522FCZZ		AE		C	A shaft gear 39T		
9	NGERH0705FCZZ		AC		C	Gear 45T		
10	LPiNS0236FCZZ		AA		C	Pin (φ3-14)		
11	LPiNS0155FCZZ		AA		C	Pin (φ3-10)		
12	NGERH1080FCZZ		AQ		C	Fusing joint gear 36T		
13	NCPL-0013FCZZ		AC		C	PF cup ring		
14	CPLTM4817FC01		AV		C	FU drive plate D		
15	NSFTZ2144FCZZ		AK		C	Joint shaft		
16	NGERH0111FCZZ		AD		A	Gear 24T		
17	CGERH0432FC01		AD		C	MM gear 30T		
18	LHLDW1013FCZZ		AB		C	Clamp holder (YMC-10)		
19	RPLU-0284FCZZ		AQ		B	Fusing solenoid		
20	LX-BZ0689FCZZ		AA		C	Screw (4×8)		
21	LX-BZ0032FCZZ		AB		C	Screw (3×10)		
22	CCLC-0272FC01		AZ	N	B	Fusing clutch 36T		
23	NSFTZ2143FCZ1		AR		C	Fusing joint shaft		
24	NBRGC2019SCZZ		AC		C	Bearing (φ8)		
25	NSFTZ2145FCZZ		AL		C	ADU drive shaft A		
26	NGERH0923FCZZ		AE		C	Drum drive gear 40T		
27	NGERH0188FCZZ		AD		C	Joint gear 30T		
28	NSFTZ2435FCZ1		AM	N	C	ADU drive shaft		
29	NGERH0483FCZZ		AB		C	Gear 38T		
30	NSFTZ2436FCZZ		AK	N	C	Unit joint shaft		
31	NGERH0995FCZZ		AN		C	Fusing drive gear 32T		
32	NSFTZ2141FCZ1		AN		C	Fusing drive shaft		
33	NSFTZ2142FCZZ		AL		C	Suction joint shaft		
34	DHAi-2447FCZZ		AK		C	Return unit interface harness		
35	LX-BZ0503FCZZ		AA		C	Screw (4×8)		
36	CPLTM4818FC01		AU		C	FU drive plate U		
37	MSPRC1534FCZZ		AA		C	DV drive spring		
38	NSFTZ2147FCZZ		AL		C	ADU joint shaft		
39	NPLYZ0278FCZ1		AD		C	Paper feeding drive pulley 38T		
40	CGERH0504FC02		AG		C	DV 37T gear		
41	LPLTM4819FCZZ		AF		C	ADU drive plate		
42	LHLDW1154FCZZ		AC		C	Wire holder (LWS5S2W)		
43	LSUPP0011FCZZ		AB		C	Suppoter (PS-3N)		
44	NGERH0457FCZZ		AC		C	DV drive gear R 22T		
45	PHÖG-0398FCZZ		AC		C	Bushing (L=30)		
46	CCLC-0273FC01		AZ	N	B	Fusing clutch 30T		
	(Unit)							
901	CPLTM4817FC61		BV	N	E	Main drive unit		

30 Drum drive unit

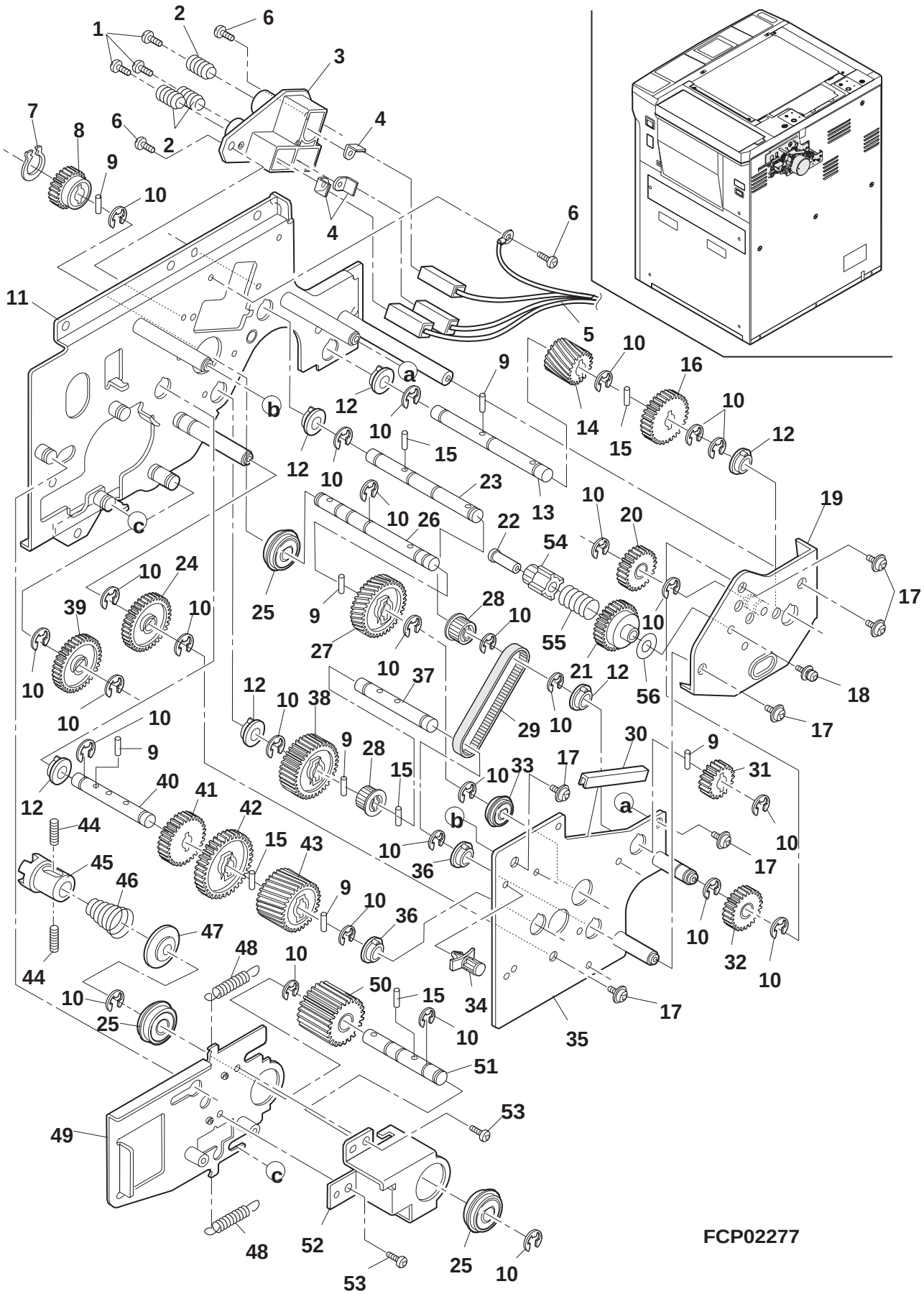

30 Drum drive unit

NO.	PARTS CODE	COMPATIBLE	PRICE RANK	NEW MARK	PART RANK	DESCRIPTION	TR NO.	VALID
1	XBPSD30P06000		AA		C	Screw (3×6)		
2	MSPRP1293FCZZ		AB		C	Electrode spring		
3	LHLDZ1252FCZZ		AK		C	MC high voltage housing		
4	QSLP-0164FCZ1		AD		C	MC socket electrode		
5	DHAi-2433FCZZ		AN		C	High voltage harness		
6	LX-BZ0689FCZZ		AA		C	Screw (4×8)		
7	PRNGP0022FCZZ		AA		C	C ring (φ8)		
8	NGERH1049FCZZ		AN		C	DR drive gear 22T		
9	LPiNS0096FCZZ		AB		C	Pin (φ3-12)		
10	XRESP70-08000		AA		C	E type ring (7mm)		
11	CPLTM4820FC01		AY		C	DR drive plate D		
12	NBRGC0133FCZZ		AC		B	PF bearing (φ8)		
13	NSFTZ2154FCZ1		AM		C	Waste toner joint shaft		
14	NGERH0689FCZZ		AF		C	Gear 18T		
15	LPiNS0155FCZZ		AA		C	Pin (φ3-10)		
16	NGERH0128FCZZ		AC		C	Gear 24T		
17	LX-BZ0503FCZZ		AA		C	Screw (4×8)		
18	LX-BZ3006SC0M		AA		C	Screw (3×6)		
19	CPLTM4824FC01		AH		C	Waste toner drive plate		
20	NGERH0457FCZZ		AC		C	DV drive gear R 22T		
21	NGERH1081FCZZ		AF		C	Cleanercup ring gear 27T		
22	NSFTZ2155FCZ1		AK		C	Cleaner joint shaft		
23	NSFTZ2153FCZZ		AM		C	Waste toner drive shaft B		
24	CGERH0432FC01		AD		C	MM gear 30T		
25	NBRGY0131FCZZ		AM		B	Bearing (with φ22 E ring)		
26	NSFTZ2149FCZZ		AP		C	DR drive shaft		
27	NGERH0923FCZZ		AE		C	Drum drive gear		
28	NPLYZ0265FCZZ		AC		C	Transport pulley		
29	NBLTH0252FCZZ		AK		B	Cleaner belt		
30	PHŌG-2042SCZZ		AB		C	Edging (CE-016,L=40)		
31	NGERH0861FCZZ		AB		C	Paper feed roller gear 18T		
32	CGERH0406FC01		AE		C	DV idler gear 24T		
33	NBRGY0466FCZZ		AK		B	Ball bearing (φ8-φ16)		
34	LSUPP0011FCZZ		AB		C	Suppoter		
35	CPLTM4821FC01		AP		C	DR drive plate U		
36	NBRGC2019SCZZ		AC		C	Bearing (φ8)		
37	NSFTZ2152FCZZ		AK		C	Waste toner drive shaft A		
38	NGERH0945FCZZ		AD		C	Fusing drive gear		
39	CGERH0271FC01		AF		C	Clutch joint gear 32T		
40	NSFTZ2150FCZZ		AL		C	DV drive shaft		
41	NGERH0783FCZZ		AC		C	Gear 28T		
42	NGERH0049FCZZ		AD		C	Develop gear 36T		
43	NGERH0924FCZZ		AE		C	DV drive gear 33T		
44	LX-BZ0575FCZZ		AB		C	Screw		
45	PCLC-0135FCZZ		AC		C	DV joint clutch		
46	MSPRC0089FCZZ		AB		C	Clutch pressure spring		
47	PSPAZ0095FCZZ		AB		C	Clutch spacer		
48	MSPRT2300FCZZ		AC		C	DV joint spring		
49	CPLTM4822FC02		AM		C	DV joint plate D		
50	NGERH0849FCZZ		AE		C	30T gear		
51	NSFTZ2151FCZZ		AL		C	DV joint shaft		
52	LPLTM4823FCZZ		AF		C	DV joint plate U		
53	XHBSD40P06000		AA		C	Screw (4×6)		
54	NCPL-0025FCZZ		AE		C	Cleaner cup ring		
55	MSPRC2376FCZZ		AD		C	CL cup ring spring		
56	LX-WZ0117FCZZ		AB		C	Washer (T05)		
	(Unit)							
901	CPLTM4820FC51		BT		E	Drum drive unit		

31 Upper paper feeding drive unit

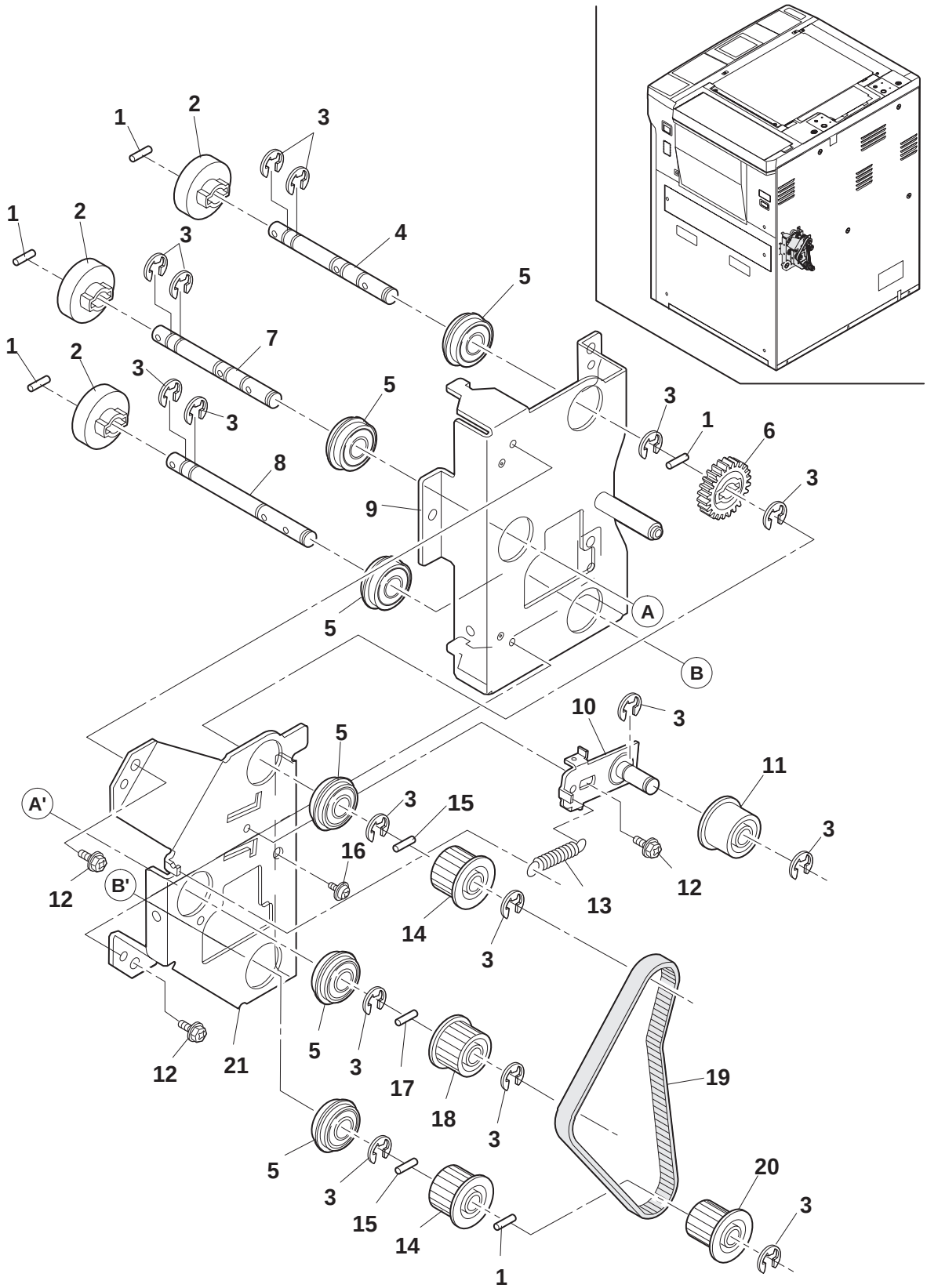

FCP02278

31 Upper paper feeding drive unit

NO.	PARTS CODE	COMPATIBLE	PRICE RANK	NEW MARK	PART RANK	DESCRIPTION	TR NO.	VALID
1	LPiNS0155FCZZ		AA		C	Pin (φ3-10)		
2	NCPL-0013FCZZ		AC		C	PF cup ring		
3	XRESP70-08000		AA		C	E type ring (7mm)		
4	NSFTZ2156FCZZ		AM		C	1st tray joint shaft		
5	NBRGY0131FCZZ		AM		B	Bearing (with φ22 E ring)		
6	NGERH0457FCZZ		AC		C	DV drive gear R 22T		
7	NSFTZ2158FCZZ		AM		C	Vertical transport joint shaft		
8	NSFTZ2157FCZZ		AM		C	2nd tray joint shaft		
9	CPLTM4825FC01		AP		C	Paper feeding drive plate D		
10	CPLTM4829FC01		AH		C	Tension plate A		
11	CPLYZ0070FC01		AE		C	Idle pulley		
12	LX-BZ0689FCZZ		AA		C	Screw (4×8)		
13	MSPRT1607FCZZ		AB		C	Auto road spring B		
14	NPLYZ0283FCZZ		AC		C	Elevator drive pulley		
15	LPiNS0096FCZZ		AB		C	Pin (φ3-12)		
16	LX-BZ0503FCZZ		AA		C	Screw (4×8)		
17	LPiNS0236FCZZ		AA		C	Pin (φ3-14)		
18	NPLYZ0300FCZZ		AE		C	Vertical transport drive pulley 24		
19	NBLTH0253FCZZ		AN		B	Tray joint belt A		
20	NPLYZ0260FCZZ		AC		C	Pulley 17P-A		
21	LPLTM4826FCZZ		AK		C	Paper feeding drive plate U		

32 Lower paper feeding drive unit

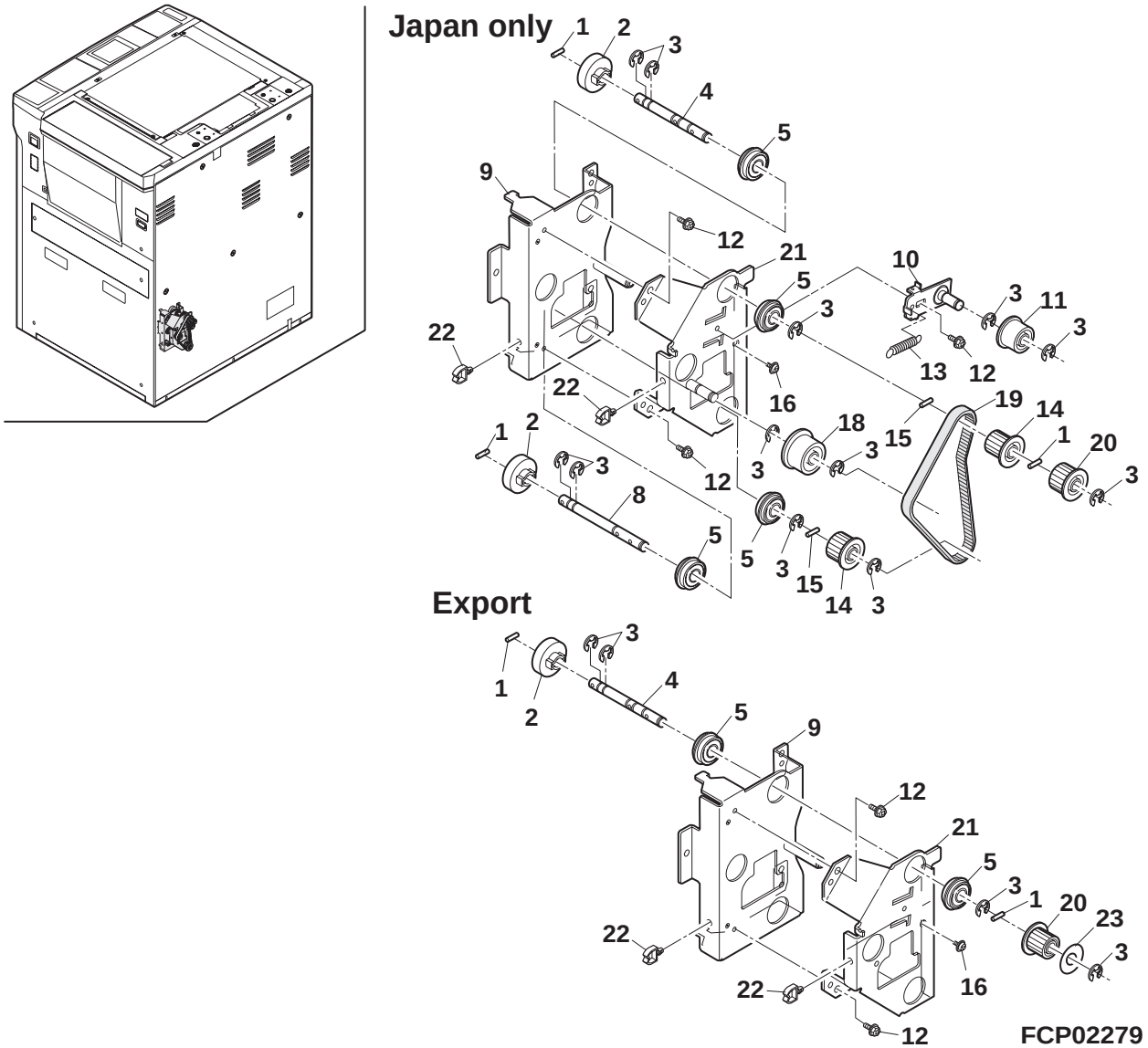

32 Lower paper feeding drive unit

NO.	PARTS CODE	COMPATIBLE	PRICE RANK	NEW MARK	PART RANK	DESCRIPTION	TR NO.	VALID
1	LPiNS0155FCZZ		AA		C	Pin (φ3-10)		
2	NCPL-0013FCZZ		AC		C	PF cup ring		
3	XRESP70-08000		AA		C	E type ring (7mm)		
4	NSFTZ2157FCZZ		AM		C	2nd tray joint shaft		
5	NBRGY0131FCZZ		AM		B	Bearing (with φ22 E ring)		
8	NSFTZ2159FCZZ		AL		C	4th tray joint shaft (Japan only)		
9	CPLTM4825FC01		AP		C	Paper feeding drive plate D		
10	CPLTM4829FC01		AH		C	Tension plate A (Japan only)		
11	CPLYZ0070FC01		AE		C	Idle pulley (Japan only)		
12	LX-BZ0689FCZZ		AA		C	Screw (4×8)		
13	MSPRT1607FCZZ		AB		C	Auto road spring B (Japan only)		
14	NPLYZ0283FCZZ		AC		C	Elevator drive pulley (Japan only)		
15	LPiNS0096FCZZ		AB		C	Pin (φ3-12)(Japan only)		
16	LX-BZ0503FCZZ		AA		C	Screw (4×8)		
18	NPLYZ0271FCZZ		AF		C	Pulley 30P-A (Japan only)		
19	NBLTH0253FCZZ		AN		B	Tray joint belt A (Japan only)		
20	NPLYZ0260FCZZ		AC		C	Pulley 17P-A		
21	CPLTM4826FC01		AN		C	Paper feeding drive plate U (Japan only)		
	LPLTM4826FCZZ		AK		C	Paper feeding drive plate U (Except Japan)		
22	LHLDW2047SCZZ		AA		C	Wire holder (WS-1NS)		
23	PSHEP3835FCZZ		AC		C	Flange sheet (Except Japan)		

33 Transport drive unit

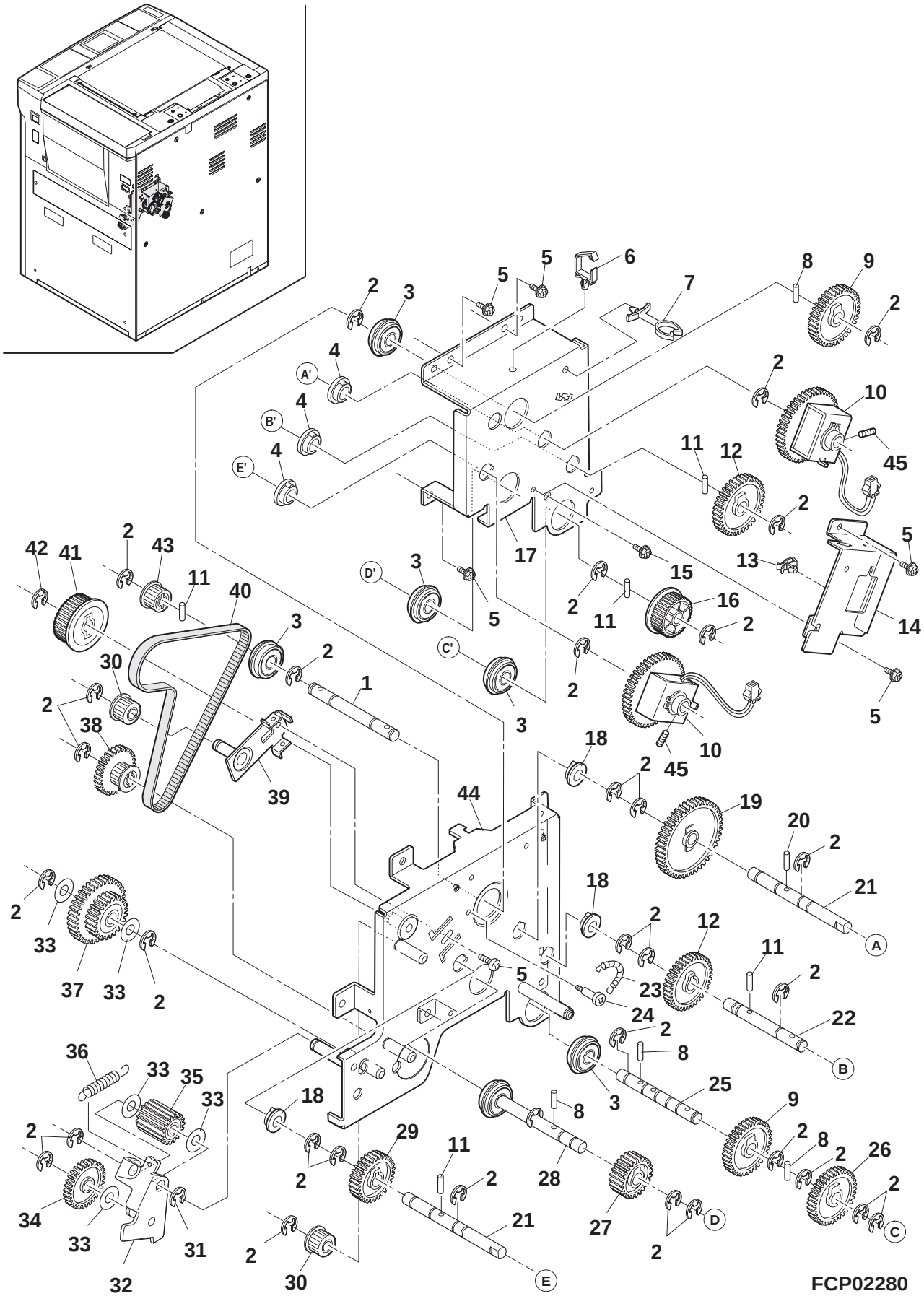

33 Transport drive unit

NO.	PARTS CODE	COMPATIBLE	PRICE RANK	NEW MARK	PART RANK	DESCRIPTION	TR NO.	VALID
1	NSFTZ2162FCZZ		AL		C	Transport drive shaft		
2	XRESP70-08000		AA		C	E type ring (7mm)		
3	NBRGY0131FCZZ		AM		B	Bearing (with φ22 E ring)		
4	NBRGC2019SCZZ		AC		C	Bearing (φ8)		
5	LX-BZ0689FCZZ		AA		C	Screw (4×8)		
6	LHLDW1264FCZZ		AD		C	Wire holder (LWS-8S-2.5W)		
7	LHLDW1061FCZZ		AB		C	Harness holder (HL-18-0)		
8	LPiNS0096FCZZ		AB		C	Pin (φ3-12)		
9	NGERH0522FCZZ		AE		C	A shaft gear 39T		
10	PCLC-0238FCZ2		AZ		B	Transport clutch 48T		
11	LPiNS0155FCZZ		AA		C	Pin (φ3-10)		
12	NGERH0049FCZZ		AD		C	Develop gear 36T		
13	LHLDW1013FCZZ		AB		C	Clamp holder (YMC-10)		
14	LPLTM4830FCZZ		AF		C	Clutch fixing plate		
15	LX-BZ0503FCZZ		AA		C	Screw (4×8)		
16	NPLYZ0258FCZZ		AC		C	Pulley 30P-B		
17	LPLTM4828FCZZ		AN		C	Transport drive plate U		
18	NBRGC0133FCZZ		AC		B	PF bearing (φ8)		
19	NGERH1051FCZZ		AG		C	Transport drive gear 54T		
20	LPiNS0236FCZZ		AA		C	Pin (φ3-14)		
21	NSFTZ2161FCZ1		AN		C	Clutch shaft		
22	NSFTZ2163FCZZ		AL		C	Transport drive shaft A		
23	MSPRT1524FCZZ		AA		C	Solenoid return spring		
24	LX-BZ0714FCZZ		AC		C	Screw		
25	NSFTZ2164FCZZ		AN		C	Transport drive shaft B		
26	NGERH0483FCZZ		AB		C	Gear 38T		
27	NGERH0783FCZZ		AC		C	Gear 28T		
28	CSFTZ2160FC51		AT		E	Transport joint shaft unit		
29	NGERH0851FCZZ		AD		C	Gear 33T		
30	CPLYZ0070FC01		AE		C	Idle pulley		
31	XRESP90-08000		AA		C	E type ring (9mm)		
32	CPLTM4831FC01		AG		C	LCC joint plate		
33	LX-WZ0048FCZZ		AA		C	Washer		
34	CGERH0500FC01		AF		C	MM gear 32T		
35	CGERH0267FC01		AF		C	DV joint gear		
36	MSPRC0760FCZZ		AB		C	Drum spring		
37	CGERH0472FC01		AE		C	PF gear 28/45T		
38	CPLYZ0286FC01		AT		C	Multi drive pulley		
39	CPLTM4829FC02		AG		C	Tension plate B		
40	NBLTH0254FCZZ		AM		B	LCC belt		
41	CPLYZ0301FC01		AH		C	Cup ring pulley 37T		
42	XRESP50-06000		AA		C	E type ring (5mm)		
43	NPLYZ0205FCZZ		AE		C	Pulley 20T		
44	CPLTM4827FC01		AW		C	Paper feeding drive plate D		
45	LX-BZ0226FCZZ		AA		C	Screw (3×6)		
	(Unit)							
901	CPLTM4827FC52		BT		E	Transport drive unit		

34 Waste toner case unit

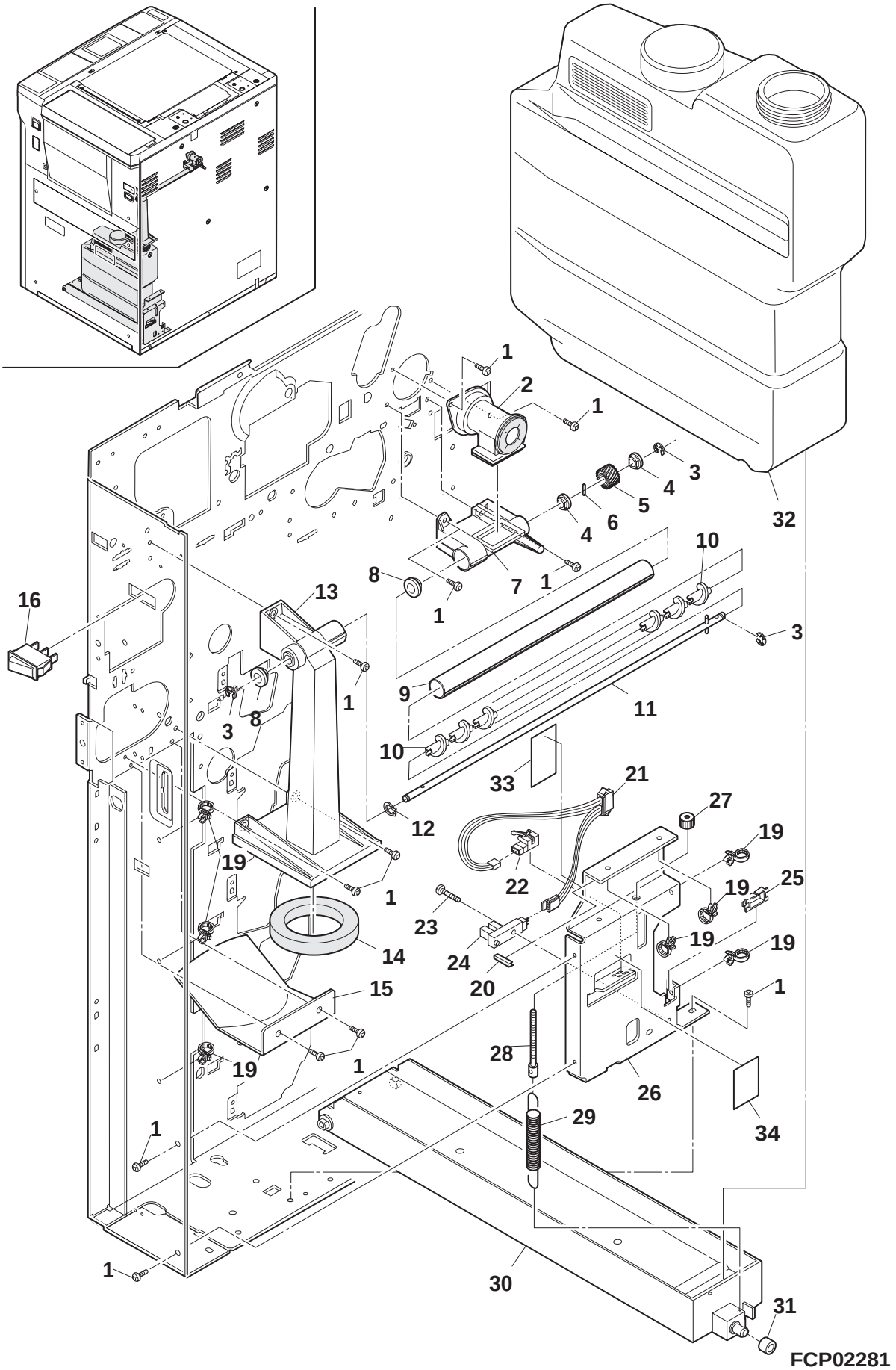

34 Waste toner case unit

NO.	PARTS CODE	COMPATIBLE	PRICE RANK	NEW MARK	PART RANK	DESCRIPTION	TR NO.	VALID
1	XHBSE40P08000		AA		C	Screw (4×8)		
2	CCŌVP1288FC01		AN		C	Waste toner cover		
3	XRESP40-06000		AA		C	4E-Type ring (4mm)		
4	NBRGC2033SCZZ		AC		B	Bearing (F5-8-6-11X)		
5	NGERH0682FCZZ		AF		C	Toner drive gear 18T		
6	LPiNS0134FCZZ		AB		C	Pin (φ2-12)		
7	MJNTP0018FCZZ		AH		C	Waste toner joint		
8	NBRGP0322FCZZ		AC		C	Bearing MX		
9	PPiPP0183FCZZ		AK		C	Waste toner pipe		
10	NSRW-0025FCZZ		AC		C	Toner screw H		
11	CSFTZ2165FC51		AQ		E	Waste toner screw shaft unit		
12	PRNGP0025FCZZ		AA		C	G type ring (GTW-5)		
13	LHLDZ1241FCZZ		AP		C	Waste toner holder		
14	PMLT-0966FCZZ		AF		C	Waste toner holder cushion		
15	LPLTM4835FCZZ		AF		C	Bottle guide plate		
16	QSW-W9030QSZZ		AV		B	Switch (LLA15L2)(Japan only)		
19	LBNDJ0043FCZ1		AA		C	Snap band (SG-130)(Japan only)		
20	PHŌG-0394FCZZ		AB		C	Bushing (L=20)		
21	DHAi-2466FCZZ		AK		C	Waste toner interface harness		
22	QSW-Z0419FCZZ		AM		B	Detect sensor N		
23	XBPSD40P10000		AA		C	Screw (4×10)		
24	VHPGP1A22LC-1		AK		B	Photo sensor (GP1A22LC)(MHPD)		
25	LHLDW0595FCZZ		AC		C	Wire holder (EDS2)		
26	LPLTM4834FCZZ		AR		C	Spring fixing plate		
27	LX-NZ0081FCZZ		AD		C	Adjusting dial		
28	LX-BZ0620FCZZ		AE		C	Adjusting bolt		
29	MSPRT2102FCZZ		AE		C	Spring		
30	PSRA-0036FCZZ		AV		C	Bottle holder		
31	NBRGC0007FCZZ		AC		C	Bearing		
32	CYŌK-0049FC01		AY		D	Waste toner bottle		
33	PSHEP3894FCZZ		AC		C	Protect sheet A		
34	PSHEP3895FCZZ		AC		C	Protect sheet B		

36 Chassis

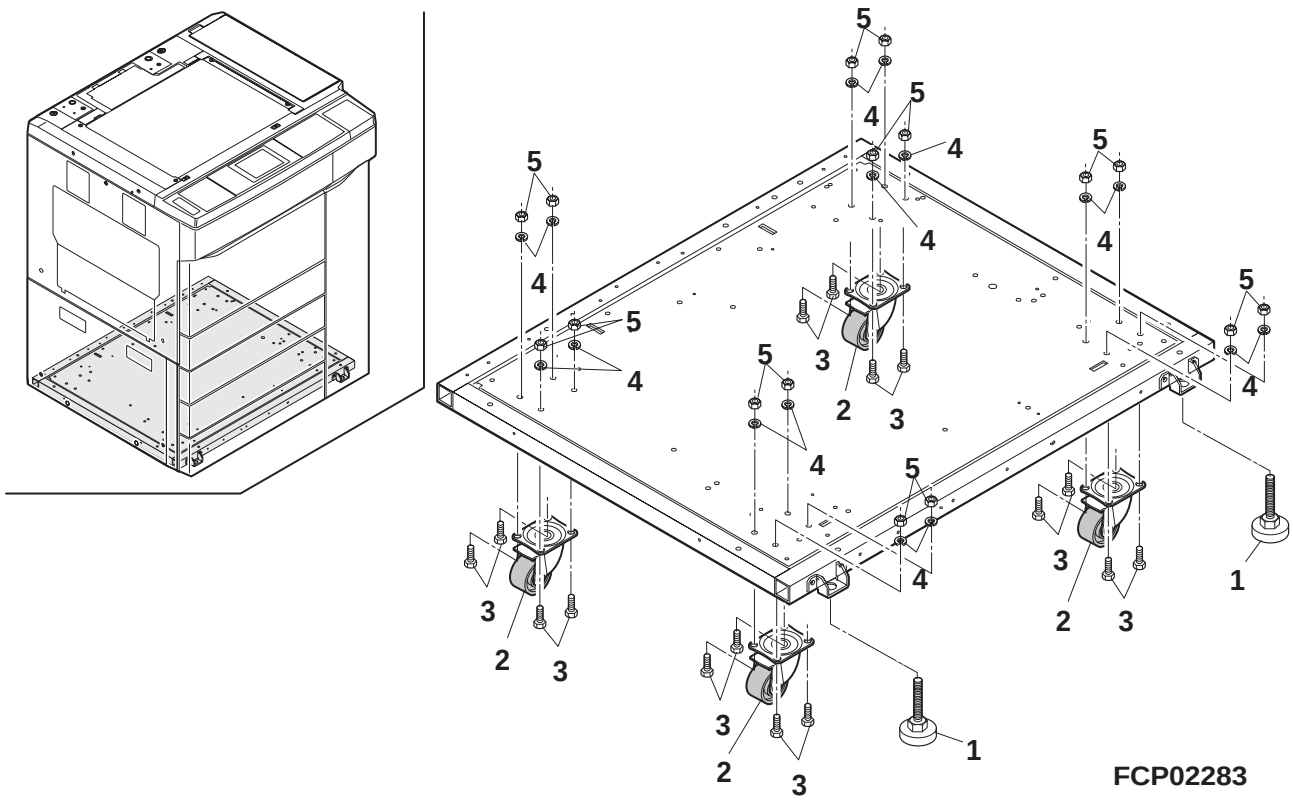

36 Chassis

NO.	PARTS CODE	COMPATIBLE	PRICE RANK	NEW MARK	PART RANK	DESCRIPTION	TR NO.	VALID
1	PAJS−0012FCZZ		AU		C	Adjuster		
2	GLEGM0070FCZZ		AV		C	Caster		
3	XBRSE60−14000		AA		C	Bolt (φ6×14)		
4	XWSSD60−15000		AA		C	Washer (6mm)		
5	XNESD60−50000		AA		C	Nut (φ6)		

N :Add
:Change
:Delete
:Others

UpDate 98/06/23

37 ADU unit 1

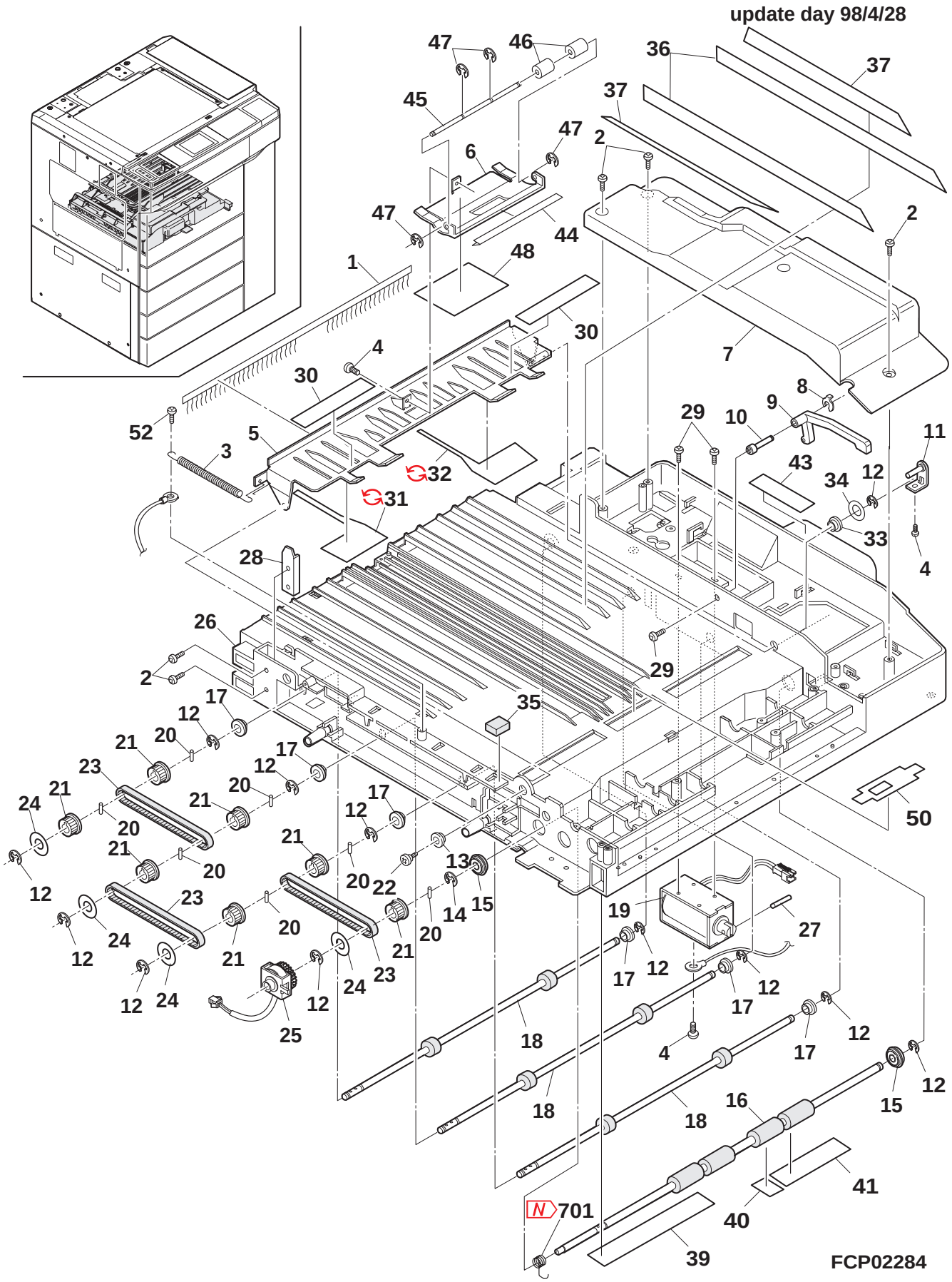

37 ADU unit 1

NO.	PARTS CODE	COMPATIBLE	PRICE RANK	NEW MARK	PART RANK	DESCRIPTION	TR NO.	VALID
1	PBRSR0147FCZ1		AM		B	Duplex discharge brush		
2	XBBSC40P08000		AA		C	Screw (4×8)		
3	MSPRT2328FCZZ		AD		C	Fixer return spring		
4	XBBSC30P06000		AA		C	Screw (3×6)		
5	CPLTM4939FC02		AP		C	Fixing plate		
6	LPLTM5026FCZZ		AH		C	Press plate		
7	PCŌVP1314FCZZ		AR		C	Duplex upper cover		
8	LSTPP0279FCZZ		AB		C	Stopper		
9	MARMP0196FCZZ		AG		C	Solenoid fulcrum arm		
10	NSFTZ2197FCZZ		AK		C	Solenoid fulcrum shaft		
11	CPLTM4953FC01		AF		C	Rotation plate		
12	XRESP50-06000		AA		C	E type ring (5mm)		
13	NBRGY2121SCZZ		AB		C	Bearing 2,paper feed roller		
14	XRESP70-08000		AA		C	E type ring (7mm)		
15	NBRGY0466FCZZ		AK		B	Ball bearing (φ8-φ16)		
16	NRŌLR1086FCZZ		AW		C	Transport roller 1		
17	NBRGM1040HCZZ		AC		B	Bearing		
18	NRŌLR1087FCZZ		AT		C	Transport roller 2		
19	RPLU-0305FCZZ		AY		B	Solenoid		
20	LPiNS0165FCZZ		AB		C	Pin (φ2-8)		
21	NPLYZ0146FCZZ		AB		C	Pulley (22MXL)		
22	LX-BZ0266FCZZ		AB		C	Screw		
23	NBLTH0258FCZZ		AK		B	4.8-125MXL belt		
24	PSHEP3029FCZZ		AA		C	Flange sheet DUP2		
25	PCLC-0246FCZZ		AX		B	ADU Transport clutch		
26	LDAiU0519FCZ1		BH		C	Duplex base plate		
27	LPiNS0196FCZZ		AA		C	Spring pin (φ3-25)		
28	LSTPF0318FCZZ		AZ		C	ADU stopper		
29	LX-BZ3006SC0M		AA		C	Screw (3×6)		
30	PSHEZ4013FCZ1		AH		C	Tip fixing sheet		
31	PSHEP3975FCZZ		AE		C	ADU fixing sheet F		
	PSHEP4588FCZZ	3	AG		C	ADU RETAINING SHEET RHP	SP2254	97/10/01
32	PSHEP3976FCZZ		AE		C	ADU fixing sheet R		
	PSHEP4587FCZZ	3	AG		C	ADU RETAINING SHEET FHP	SP2254	97/10/01
33	NBRGY2100SCZA		AB		C	Platen sleeve		
34	LX-WZ0208FCZZ		AA		C	Washer DV		
35	PCUSS0328FCZZ		AC		C	Cushion		
36	PSHEZ4017FCZZ		AF		C	ADU tray sheet		
37	PSHEZ4017FCZZ		AF		C	ADU tray sheet (Japan,AB series)		
39	PSHEP3967FCZZ		AF		C	ADU guide sheet A		
40	PSHEP3968FCZZ		AD		C	ADU guide sheet B		
41	PSHEP3969FCZZ		AF		C	ADU guide sheet C		
43	TLABZ3810FCZZ		AC		C	ADU green label		
44	PSHEZ4012FCZZ		AC		C	Press plate sheet		
45	NSFTZ2239FCZZ		AK		C	Press plate shaft		
46	NRŌLP0650FCZZ		AB		C	Roller M3		
47	XRESP30-04000		AA		C	E type ring (3mm)		
48	PSHEP3977FCZZ		AE		C	ADU fixer sheet C		
50	PSHEP3858FCZZ		AE		C	Sensor protect sheet		
52	XUBSD40P08000		AA		C	Screw (4×8)		
701	N MSPRC2705FCZZ	6	AF	N		ADU BRAKE GROUND SP	SP2254	97/10/01
	(Unit)							
901	CDAiU0519FC31		CQ		E	ADU unit (This includes Block 37,38,39,40) (Japan only)		
	CDAiU0519FC33		CQ		E	ADU unit (This includes Block 37,38,39,40) (Inch series)		
	CDAiU0519FC32		CQ		E	ADU unit (This includes Block 37,38,39,40) (Export··· AB series)		

38 ADU unit 2

update day 98/4/28

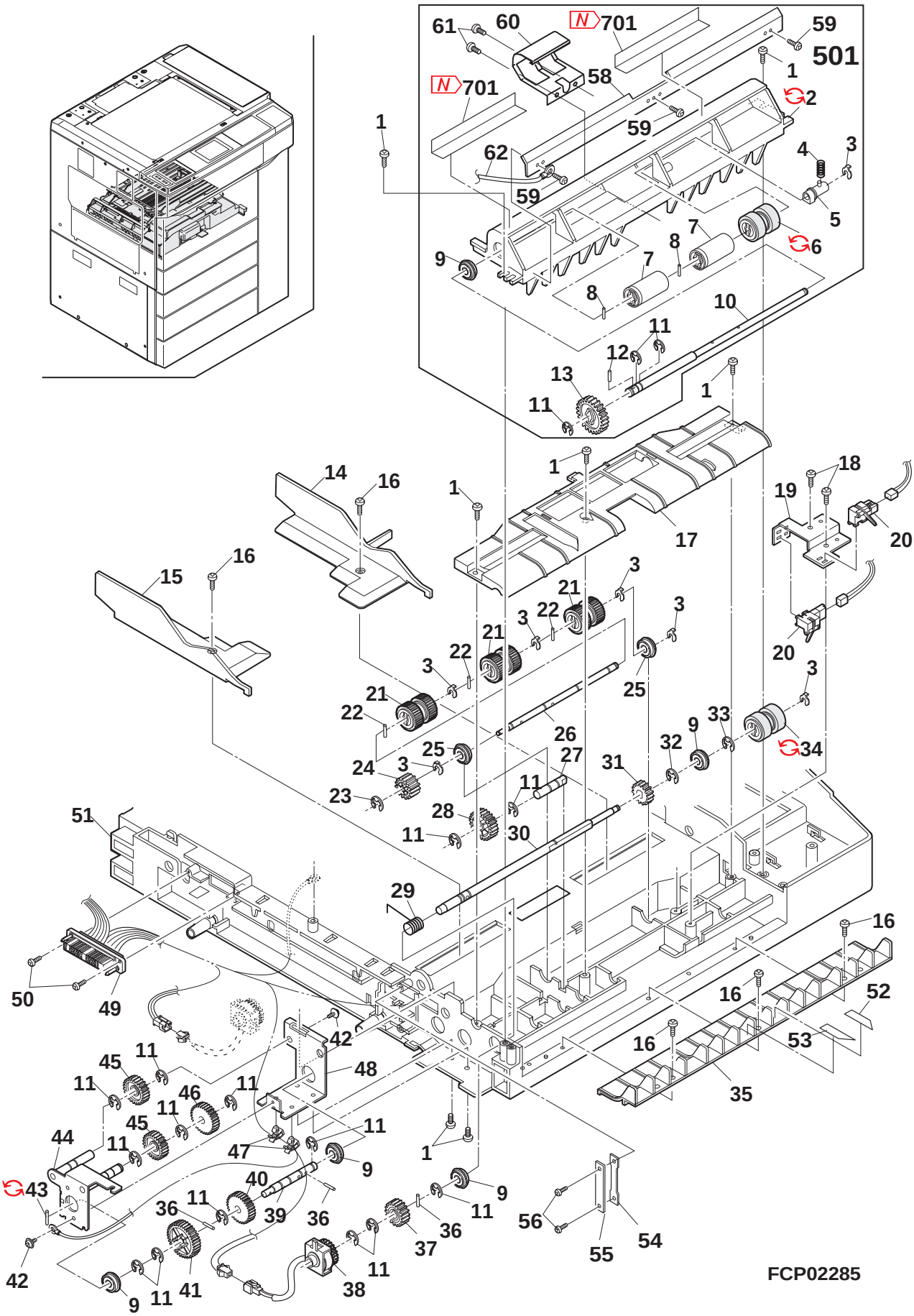

38 ADU unit 2

NO.	PARTS CODE	COMPATIBLE	PRICE RANK	NEW MARK	PART RANK	DESCRIPTION	TR NO.	VALID
1	XBBSC40P08000		AA		C	Screw (4×8)		
2	PGiDM1592FCZ1		AQ		C	Paper feeding guide		
	PGiDM1592FCZ2	3	AQ		C	PAPER SUPPLY GUIDE	SP2254	97/10/01
3	LSTPP0279FCZZ		AB		C	Stopper		
4	MSPRC2693FCZZ		AD		C	Fulcrum spring		
5	CLEVP0687FC02		AG		C	Lever		
6	NRŌLR1239FCZZ		AP		C	Roller		
	NRŌLR0964FCZZ	3	AP		C	ADU REVERSE ROLLER	SP2254	97/10/01
7	PCLC-0244FCZZ		BA		B	Clutch		
8	LPiNS0165FCZZ		AB		C	Pin (φ2-8)		
9	NBRGY0466FCZZ		AK		B	Ball bearing (φ8-φ16)		
10	NSFTZ2190FCZZ		AS		C	Roller shaft		
11	XRESP70-08000		AA		C	E type ring (7mm)		
12	LPiNS0096FCZZ		AB		C	Pin (φ3-12)		
13	NGERH0578FCZZ		AC		C	TR gear 27T		
14	LPLTP4940FCZ1		AK		C	Regulation guide plate F		
15	LPLTP4941FCZ1		AK		C	Regulation guide plate R		
16	XUBSD40P08000		AA		C	Screw (4×8)		
17	PCŌVP1313FCZZ		AL		C	Paper feeding cover		
18	XUBSD30P08000		AA		C	Screw (3×8)		
19	LPLTM4942FCZZ		AE		C	Sensor fixing plate		
20	QSW-Z0457FCZZ		AP		B	DGD1 switch		
21	NRŌLR0956FCZZ		AM		C	PU roller		
22	LPiNS0134FCZZ		AB		C	Pin (φ2-12)		
23	XRESP30-04000		AA		C	E type ring (3mm)		
24	NGERH1028FCZZ		AP		C	Gear 16T		
25	NBRGY0527FCZZ		AM		B	Ball bearing		
26	NSFTZ2189FCZ1		AP		C	Roller shaft		
27	NSFTZ2195FCZZ		AL		C	Adle shaft		
28	CGERH0268FC01		AE		C	Idle gear 27T		
29	MSPRC2329FCZZ		AD		C	Brake spring		
30	NSFTZ2191FCZ1		AU		C	Paper feeding roller shaft		
31	NGERH0184FCZZ		AB		C	Suction gear 16T		
32	XRESP60-07000		AA		C	E type ring (6mm)		
33	XRESP50-06000		AA		C	E type ring (5mm)		
34	NRŌLR1238FCZZ		AU		C	ADU paper feeding roller		
	NRŌLR1088FCZZ	3	AV		C	ADU PAPER SUPPLY ROLLER	SP2254	97/10/01
35	PGiDM1587FCZZ		AK		C	ADU paper guide		
36	LPiNS0155FCZZ		AA		C	Pin (φ3-10)		
37	NGERH0457FCZZ		AC		C	DV drive gear R 22T		
38	PCLC-0245FCZZ		AX		B	ADU paper feeding clutch		
39	NSFTZ2194FCZZ		AN		C	Duplex drive shaft		
40	NGERH0349FCZZ		AC		C	Gear 28T		
41	NGERH0476FCZZ		AB		C	Fusing drive gear 35T		
42	LX-BZ3006SC0M		AA		C	Screw (3×6)		
43	LPiNS7021XCZZ		AA		C	Spring pin (φ2-12)		
	LPiNS7011SCZZ	3	AA		C	SPRING PIN IRON	SP2254	97/10/01
44	CPLTM4935FC01		AQ		C	Drive plate A		
45	CGERH0406FC01		AE		C	DV idler gear 24T		
46	CGERH0432FC01		AD		C	MM gear 30T		
47	LHLDW7011XCZZ		AB		C	Holder (YMC-05-0)		
48	LPLTM4936FCZZ		AH		C	Drive plate B		
49	DHAi-2451FCZZ		BE		C	ADU harness		
50	LX-BZ1006LC03		AA		C	Screw		
51	LDAiU0519FCZ1		BH		C	Duplex base plate		
52	PSHEZ4041FCZZ		AH		C	Separator pad F		
53	PSHEZ4042FCZZ		AH		C	Separator pad R		
54	PCŌVP1329FCZZ		AH		C	ADU belt cover		
55	PCŌVP1326FCZZ		AC		C	ADU harness cover		
56	XUBSD30P08000		AA		C	Screw (3×8)		
58	LPLTM5024FCZZ		AH		C	PF guide reinforce plate		
59	XUBSD30P08000		AA		C	Screw (3×8)		
60	LPLTM5025FCZZ		AG		C	Guide plate		
61	XHPSD30P06000		AA		C	Screw (3×6)		
62	DHAi-2899FCZZ		AD	N	C	ADU earth harness		
501	CGiDM1592FC31		BM		E	Paper feeding guide unit		
701	N PSHEP4580FCZZ	6	AF	N		ADU GUIDE SHEET	SP2254	97/10/01
	(Unit)							
901	CDAiU0519FC31		CQ		E	ADU unit (This includes Block 37,38,39,40) (Japan only)		
	CDAiU0519FC33		CQ		E	ADU unit (This includes Block 37,38,39,40) (Inch series)		
	CDAiU0519FC32		CQ		E	ADU unit (This includes Block 37,38,39,40) (Export ·· AB series)		

39 ADU unit 3

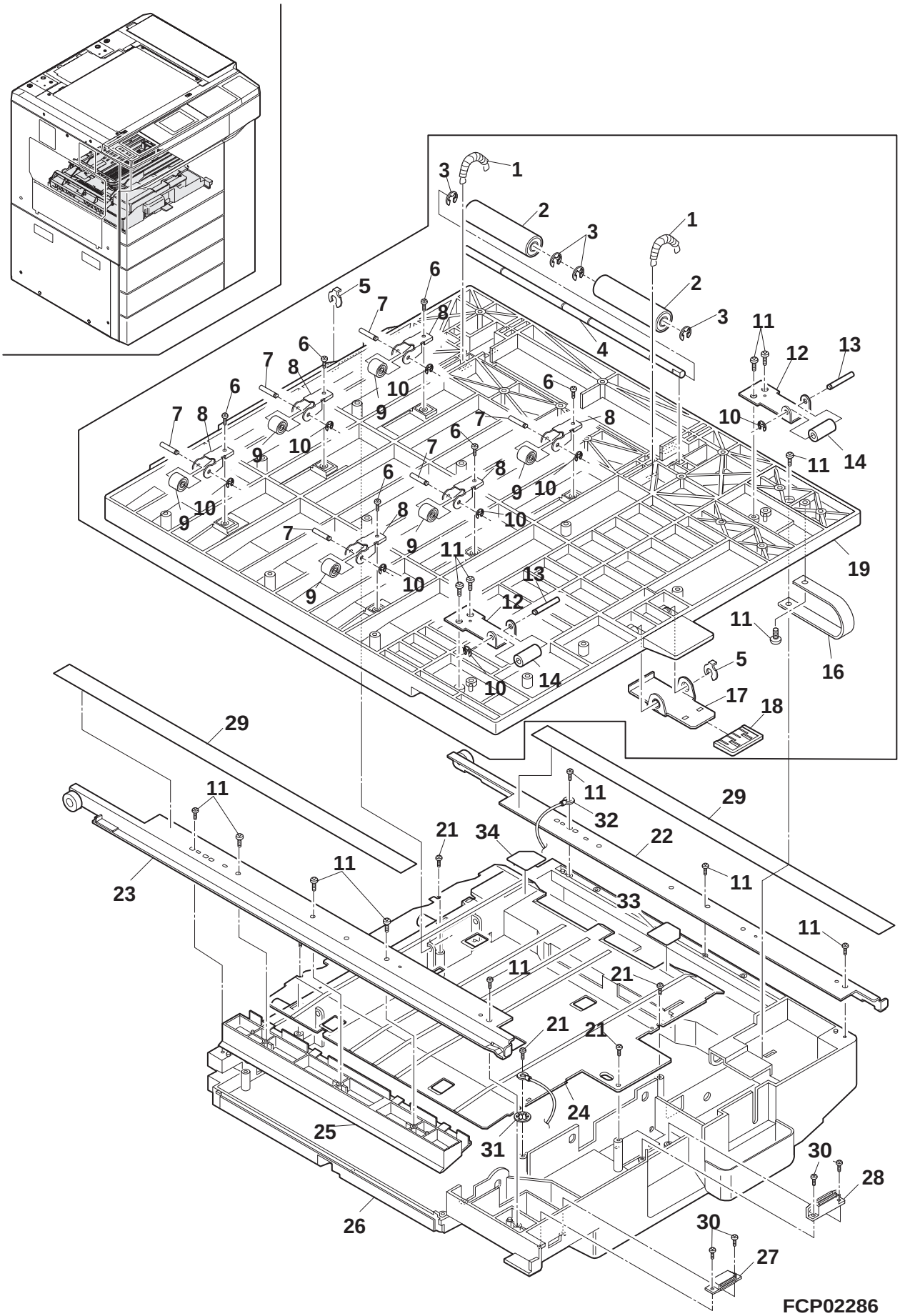
1
2
3
4
5
6
7
8
9
10
11
12
13
14
16
17
18
19
21
22
23
24
25
26
27
28
29
30
31
32
33
34
FCP02286

39 ADU unit 3

NO.	PARTS CODE	COMPATIBLE	PRICE RANK	NEW MARK	PART RANK	DESCRIPTION	TR NO.	VALID
1	MSPRT2330FCZZ		AC		C	DUP roller spring		
2	CCLR-0330FC01		AG		C	Transport collar		
3	XRESP50-06000		AA		C	E type ring (5mm)		
4	NSFTZ2198FCZZ		AP		C	Roller shaft		
5	LSTPP0279FCZZ		AB		C	Stopper		
6	XUBSD30P06000		AA		C	Screw (3×6)		
7	NSFTZ1907FCZZ		AF		C	Roller shaft		
8	LPLTM4287FCZ1		AD		C	Upper roller plate		
9	CRŌLP0943FC01		AG		C	Upper roller		
10	XRESP30-04000		AA		C	E type ring (3mm)		
11	XUBSD40P08000		AA		C	Screw (4×8)		
12	LFiX-0483FCZZ		AF		C	Paper guide fixing plate DUP		
13	NSFTZ2199FCZZ		AG		C	Paper guide shaft		
14	NRŌLP0650FCZZ		AB		C	Roller M3		
16	LBNDJ0064FCZ1		AE		C	PG band		
17	LPLTM4934FCZZ		AF		C	Lock plate		
18	JHNDP0096FCGZ		AD		C	Lever handle		
19	PGiDM1590FCZ1		BC		C	Transport paper guide		
21	XBBSC40P08000		AA		C	Screw (4×8)		
22	CRALM0124FC01		AS		C	Duplex rail L		
23	CRALM0125FC01		AS		C	Duplex rail R		
24	PGiDH1589FCZ1		AV		C	ADU transport paper guide		
25	PGiDM1588FCZZ		AL		C	ADU paper guide		
26	LDAiU0519FCZ1		BH		C	Duplex base plate		
27	PMAGT0015FCZZ		AD		C	Magnet catch (10P)		
28	PMAGT0078FCZZ		AG		B	Magnet catch (5.0)		
29	PSHEZ3991FCZZ		AK		C	Duplex rail protect sheet		
30	XUBSD30P08000		AA		C	Screw (3×8)		
31	LX-WZ0010FCZZ		AA		C	Washer		
32	DHAi-2899FCZZ		AD	N	C	ADU earth harness		
33	PSHEP4550FCZZ		AD	N	C	ADU transport PG sheet F		
34	PSHEP4551FCZZ		AD	N	C	ADU transport PG sheet R		
	(Unit)							
901	CDAiU0519FC31		CQ		E	ADU unit (This includes Block 37,38,39,40) (Japan only)		
	CDAiU0519FC33		CQ		E	ADU unit (This includes Block 37,38,39,40) (Inch series)		
	CDAiU0519FC32		CQ		E	ADU unit (This includes Block 37,38,39,40) (Export ·· AB series)		

40 ADU unit 4

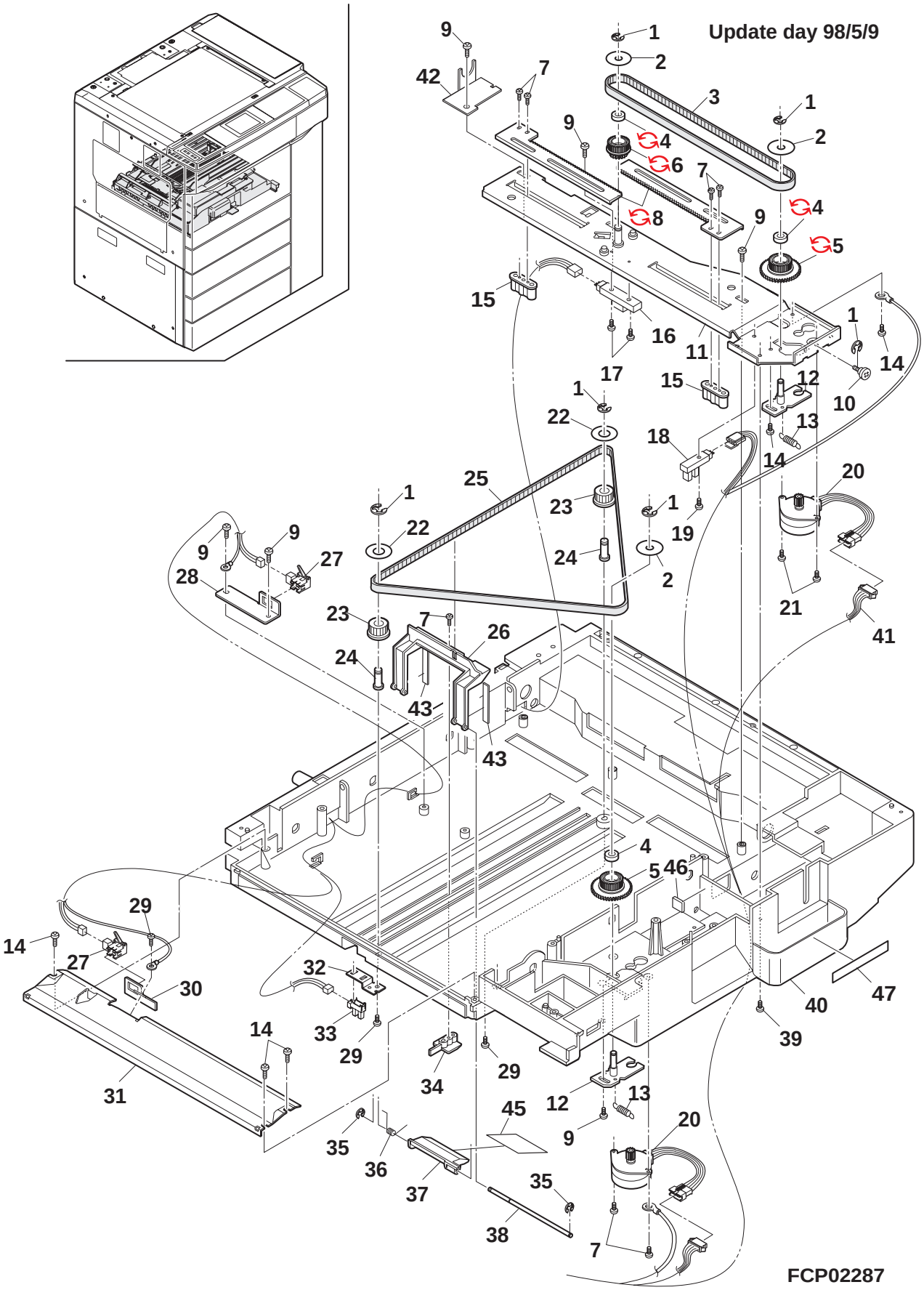

40 ADU unit 4

NO.	PARTS CODE	COMPATIBLE	PRICE RANK	NEW MARK	PART RANK	DESCRIPTION	TR NO.	VALID
1	XRESP50-06000		AA		C	E type ring (5mm)		
2	PSHEP2340FCZZ		AA		C	Flange sheet DUP		
3	NBLTH0209FCZZ		AH		C	Drive belt S		
4	NBRGC0344FCZZ		AC		B	Bearing (φ6)		
	NBRGY1032HCZZ	1	AF		B	BEARING	SP2274	98/03/01
5	NGERH0612FCZZ		AD		C	SK gear 1		
	NGERH1229FCZZ	5	AE		C	DRIVE GEAR	SP2274	98/03/01
6	NGERH0613FCZZ		AD		C	Belt gear		
	NGERH1228FCZZ	5	AD		C	BELT GEAR	SP2274	98/03/01
7	XUBSD30P08000		AA		C	Screw (3×8)		
8	NGERR0614FCZZ		AH		C	Rack		
	NGERR1230FCZZ	1	AF		C	RACK	SP2274	98/03/01
9	XUBSD40P08000		AA		C	Screw (4×8)		
10	LX-BZ0677FCZZ		AD		C	Screw		
11	CPLTM4269FC03		AU		C	Fixing plate		
12	CPLTM4058FC01		AG		C	PM fixing plate		
13	MSPRT1944FCZZ		AA		C	Belt tension spring		
14	XBBSC40P08000		AA		C	Screw (4×8)		
15	PSPAZ0603FCZZ		AD		C	Spacer		
16	VHPGP2A10//-1		AR		B	Photo transistor (GP2A10)		
17	XBPSD30P10K00		AA		C	Screw (3×10K)		
18	VHPGP1A22LC-1		AK		B	Photo sensor (GP1A22LC)(MHPD)		
19	XBPSD40P12K00		AA		C	Screw (4×12K)		
20	RMOTP0566FCZZ		AV		B	Stepping motor		
21	XHPSD30P06000		AA		C	Screw (3×6)		
22	PSHEP3029FCZZ		AA		C	Flange sheet DUP2		
23	NPLYZ0146FCZZ		AB		C	Pulley (22MXL)		
24	LBOSZ1686FCZZ		AG		C	Rear guide boss		
25	NBLTH0259FCZZ		AM		B	413MXL belt		
26	PGiDM1593FCZZ		AF		C	Rear plate guide		
27	QSW-Z0464FCZZ		AQ		B	FPPD switch		
28	LPLTM4937FCZZ		AD		C	Transport sensor fixing plate		
29	XBBSC30P06000		AA		C	Screw (3×6)		
30	LPLTM4943FCZZ		AD		C	Sensor fixing plate		
31	PGiDH1591FCZZ		AN		C	Upper paper guide		
32	LPLTM4938FCZZ		AD		C	Rear plate HP fixing plate		
33	VHPGP1A71A1-1		AG		B	Photo sensor (GP1A71A1)		
34	LPLTP4945FCZZ		AE		C	Rear plate guide fixing plate		
35	XRESP20-03000		AA		C	E type ring (2mm)		
36	MSPRC2331FCZZ		AC		C	Rear plate guide spring		
37	PGiDM1594FCZZ		AE		C	Rear plate guide upper		
38	NSFTZ2200FCZZ		AG		C	Rear plate guide rotation shaft		
39	XHBSD40P14000		AA		C	Screw (4×14)		
40	LDAiU0519FCZ1		BH		C	Duplex base plate		
41	DHAi-2451FCZZ		BE		C	ADU harness		
42	QEARP0082FCZZ		AG		C	ADU roller earth spring		
43	PSHEZ3970FCZZ		AH		C	Rear guide sheet		
45	PSHEP3974FCZZ		AC		C	Rear guide fixing sheet		
46	PCUSG0329FCZZ		AB		C	SOL arm cushion		
47	TLABZ3768FCZZ		AC		C	ADU handle label		
	(Unit)							
901	CDAiU0519FC31		CQ		E	ADU unit (This includes Block 37,38,39,40) (Japan only)		
	CDAiU0519FC33		CQ		E	ADU unit (This includes Block 37,38,39,40) (Inch series)		
	CDAiU0519FC32		CQ		E	ADU unit (This includes Block 37,38,39,40) (Export·· AB series)		

41 MC unit

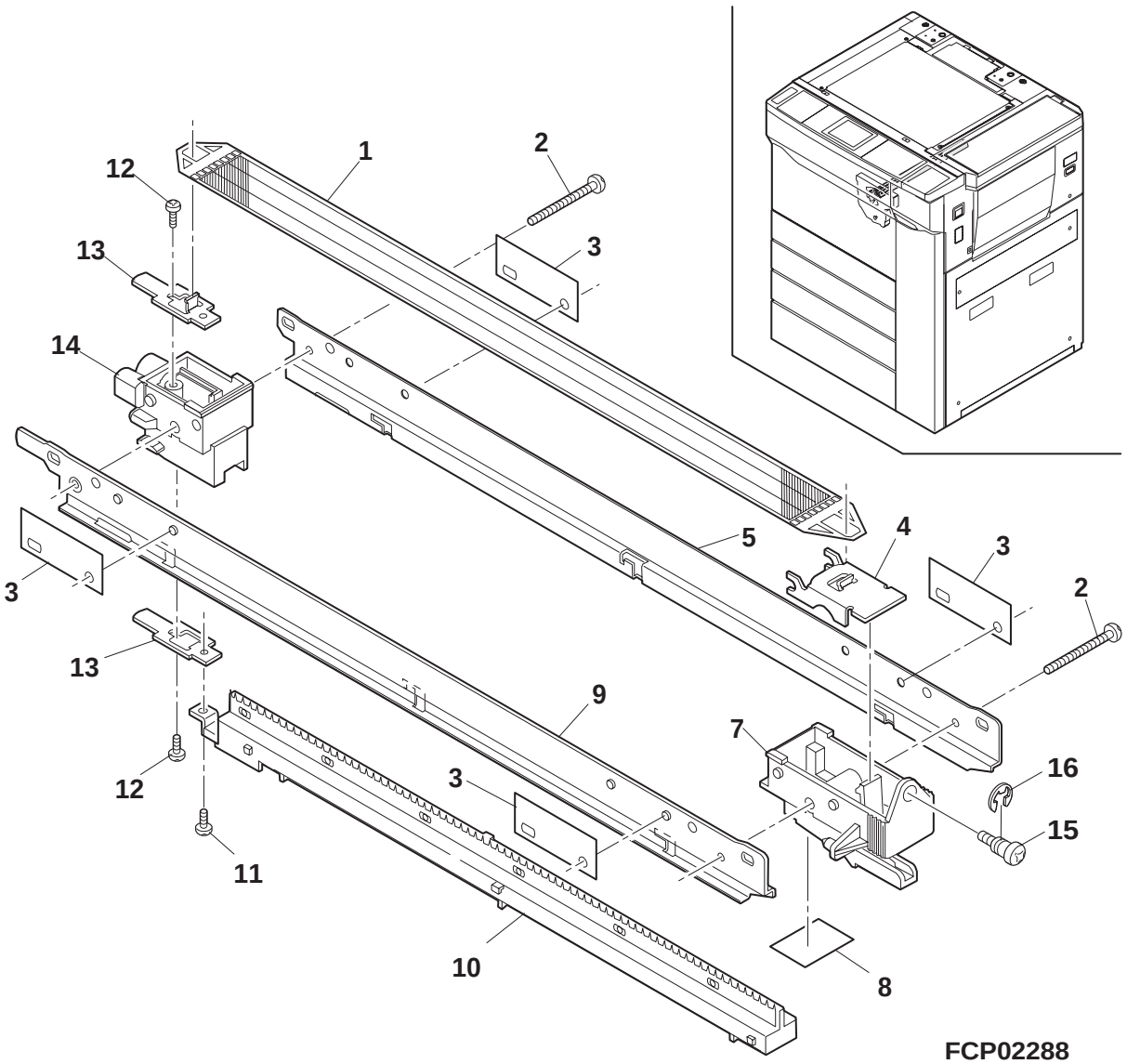

41 MC unit

NO.	PARTS CODE	COMPATIBLE	PRICE RANK	NEW MARK	PART RANK	DESCRIPTION	TR NO.	VALID
1	LPLTZ4876FCZZ		AN		C	MC grid		
2	XBPSD40P27000		AA		C	Screw (4×27)		
3	PSHEP3804FCZZ		AC		C	MC side sheet		
4	LHLDZ1251FCZZ		AD		C	MC grid holder		
5	LPLTM4875FCZZ		AL		C	MC plate B		
7	LHLDZ1249FCZZ		AL		C	MC holder F		
8	PSHEP3806FCZZ		AC		C	MC front sheet		
9	LPLTM4874FCZZ		AM		C	MC plate A		
10	CPLTM4129FC01		AS		C	Plate		
11	XBPS230P04000		AA		C	Screw (2.3×4)		
12	XEBSD30P06000		AA		C	Screw (3×6)		
13	LPLTM4877FCZZ		AE		C	MC high voltage contact plate		
14	LHLDZ1250FCZZ		AH		C	MC holder R		
15	LX-BZ0656FCZZ		AD		C	Screw		
16	XRESP50-06000		AA		C	E type ring (5mm)		
	(Unit)							
901	CPLTM4874FC51		BD		E	MC unit		

N :Add
:Change
:Delete
:Others

UpDate 98/06/23

42 TC Case unit

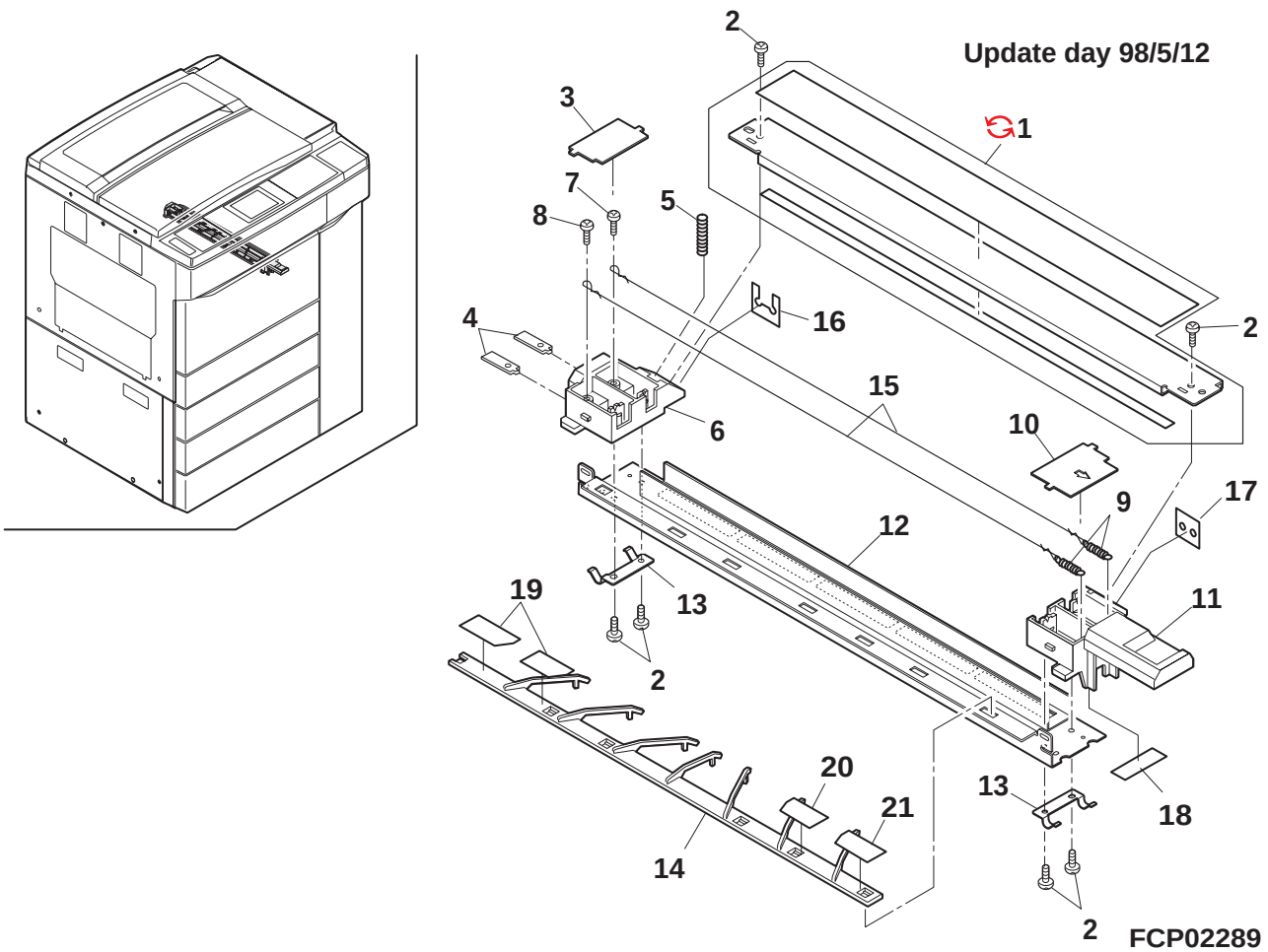

42 TC Case unit

NO.	PARTS CODE	COMPATIBLE	PRICE RANK	NEW MARK	PART RANK	DESCRIPTION	TR NO.	VALID
1	CGiDH1570FC51		AP		E	TC guide unit		
	♻ CGiDH1570FC52	3	AP		E	TC GUIDE UNIT(FROM 1ST LOT)	SP2276	
2	XEPSD30P06000		AA		C	Screw (3×6)		
3	PCOVP1290FCZZ		AC		C	TC cover R		
4	QSLP-0183FCZZ		AD		C	TC,AC electrode		
5	MSPRP1550FCZZ		AA		C	TC spring		
6	LHLDZ1243FCZ1		AK		C	TC holder R		
7	XBPSD30P08000		AA		C	Screw (3×8)		
8	XBPSD30P10000		AA		C	Screw (3×10)		
9	MSPRT0513FCZZ		AA		C	MC tension spring		
10	PCOVP1289FCZZ		AC		C	TC cover F		
11	LHLDZ1242FCZ1		AL		C	TC holder F		
12	CCASZ0273FC02		AT		C	TC case		
13	MSPRP2301FCZ1		AE		C	TC case plate spring		
14	PGiDH0638FCZZ		AE		C	AC guide		
15	DWiR-0466CSZZ		BG		B	Charger wire		
16	PSPAZ0676FCZZ		AC		C	Guide spacer R		
17	PSPAZ0675FCZZ		AC		C	Guide spacer F		
18	PSHEZ3946FCZZ		AC		C	TC holder sheet F		
19	PSHEP3996FCZZ		AF		C	Delivery guide sheet R		
20	PSHEP3995FCZZ		AF		C	Delivery guide sheet F2		
21	PSHEP3994FCZZ		AF		C	Delivery guide sheet F1		
	(Unit)							
901	CCASZ0273FC51		BD		E	TC case unit		
	♻ CCASZ0273FC52	3	BC		E	TC CASE UNIT(FROM 1ST LOT)	SP2276	

N :Add
:Change
:Delete
:Others

UpDate 98/06/23

43 AC circuit base unit

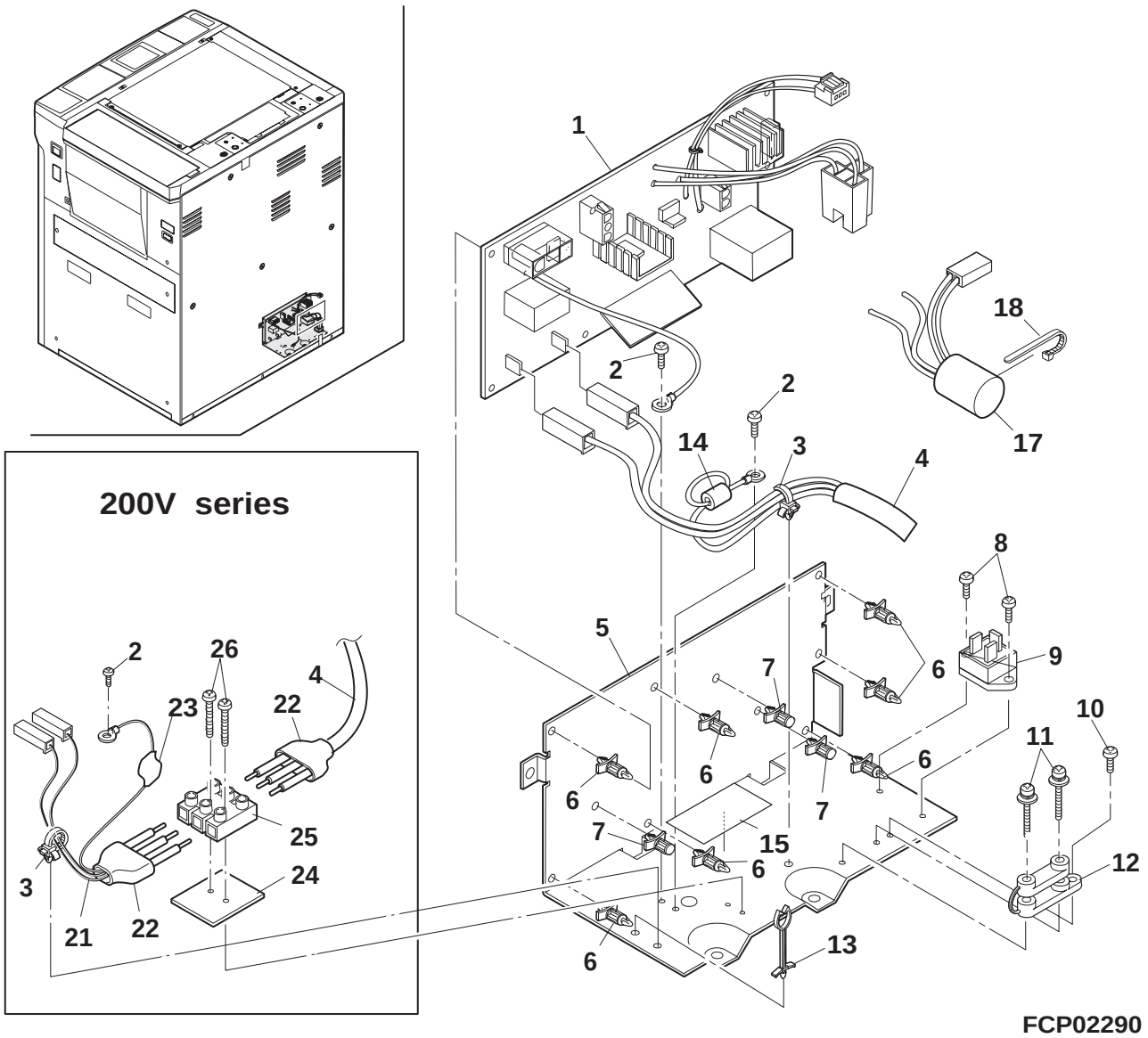

43 AC circuit base unit

NO.	PARTS CODE	COMPATIBLE	PRICE RANK	NEW MARK	PART RANK	DESCRIPTION	TR NO.	VALID
1	CPWBF1250FC51		BP	N	E	AC circuit PWB (Japan only)		
	CPWBF1254FC51		BN	N	E	AC circuit PWB (100V series)		
	CPWBF1251FC51		BS	N	E	AC circuit PWB (200V series)		
2	XBPBZ40P06K00		AA		C	Screw (4×6K)		
3	LBNDJ0043FCZ1		AA		C	Snap band (SG-130)		
4	DHAi-2502FCZZ		AZ		B	AC cord (Japan only)		
	DHAi-2502FC11		BC		B	AC cord (UL,CSA Plug)(U.S.A.,CANADA,LAG2,Brazil,Indonesia)		
	DHAi-2502FC12		BC		B	AC cord (Japan plug)(Philippines)		
	DHAi-2502FC13		BE		B	AC cord (Saudi Arabia)		
	DHAi-2502FC14		BB		B	AC cord (Taiwan)		
	QACCL8421QCN1		AX		B	AC cord (Australia,New Zealand)		
	QACCV6420QCN2		AX		B	AC cord (Europe,LAG3,4,Pakistan,Russia,Greece,Lebanon,Iran,Iraq,Nigeria, Turkey,Egypt,Jordan,Syria,Indonesia)		
	QACCV6420QCN2		AU		B	AC cord (Thailand,Tunisia,Morocco,Algeria,West Africa,Oman,Katar,UAE)		
	QACCE7422QCZZ		BB		B	AC cord (U.Kingdom,Cyprus,Bahrain,Kuwait,North Yemen,Saudi Arabia)		
	QCNW-0001QCZZ		AN		B	AC Wire (South Africa,India,Sri Lanka,Hong Kong,Singapore,Malaysia)		
	QPLGA4171CCZZ		AN		B	AC Plug (South Africa,India,Sri Lanka,Hong Kong)		
	QPLGA0001QCZZ		AN		B	AC Plug (Technolarco only)		
	QPLGA0003QCZZ		AN		B	AC Plug (Singapore)		
	PHŌG-1023CCZZ		AB		B	AC plug holder (South Africa,India,Sri Lanka,Hong Kong)		
5	LPLTM4812FCZZ		AQ		C	AC PWB fixing plate		
6	LSUPP0060FCZZ		AA		C	PWB supporter (SPLS-6)		
7	LSUPP0076FCZZ		AA		C	PWB supporter (SPS-6)		
8	XBPSD40P08K00		AA		C	Screw (4×8K)		
9	VHSBCR16HM08S		AN		B	Thyristor (BCR16HM08S)(Japan,100V series)		
	VHSBCR16HM12S		AP		B	Thyristor (BCR16HM12S)(200V series)		
10	XBPSD40P08KS0		AA		C	Screw (4×8KS)		
11	XBPSD40P25XS0		AA		C	Screw (4×25XS)(UL,CSA Plug‥120V only)		
	XBPSD40P20XS0		AA		C	Screw (4×20XS)(Except 120V)		
12	LFiX-0084FCZZ		AC		C	AC cord holder (110V/120V)		
	LFiX-0016FCZZ		AD		C	AC cord holder (Except 110V/120V)		
13	LHLDW1061FCZZ		AB		C	Harness holder (HL-18-0)		
14	RCŌRF1034LCZZ		AG		C	Core (Japan,U.S.A.,CANADA,LAG2,Brazil,Taiwan)		
15	PSHEP1096FCZZ		AD		C	Harness protect sheet		
17	RFiLN0027FCZZ		BF		B	Noise filter (Taiwan only)		
18	LBNDJ1001HCZZ		AE		C	Wire band (Taiwan only)		
21	DHAi-2429FCZZ		AG		C	3P terminal base harness (200V series‥Except Philippines)		
22	PHŌG-0213FCZZ		AB		C	3P terminal base cover (200V series‥Except Philippines)		
23	RCiLF0045FCZZ		AN		C	Earth indactor coil (200V series‥Except Philippines)		
24	PSHEP1804FCZZ		AB		C	3P terminal protect sheet (200V series‥Except Philippines)		
25	QTANN0015FCZZ		AG		C	3P terminal base (200V series‥Except Philippines)		
26	XBPSD30P14000		AA		C	Screw (3×14)(200V series‥Except Philippines)		

N :Add
:Change
:Delete
:Others

UpDate 98/06/23

44 500 Tray paper feeding unit

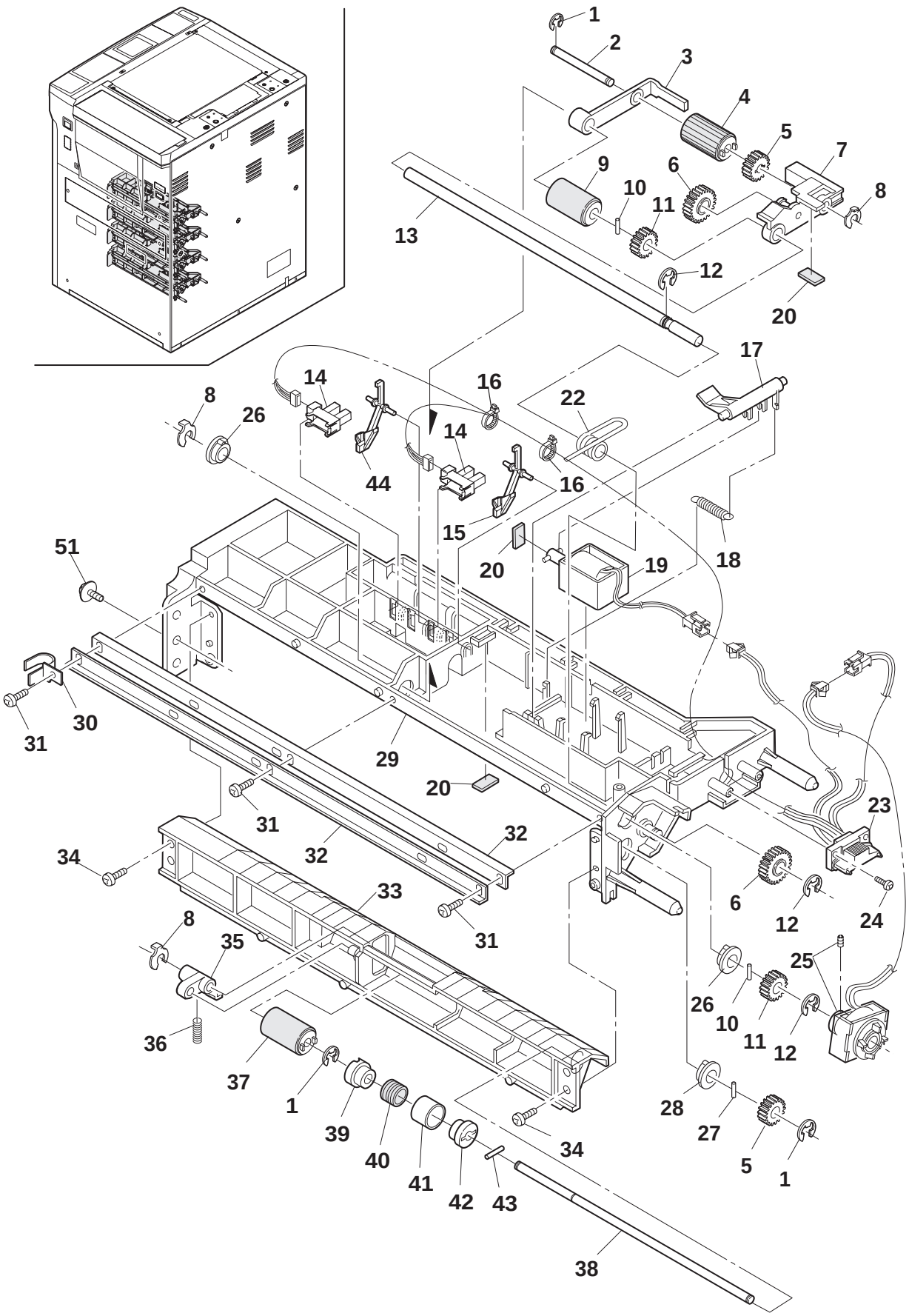

FCP02291

44 500 Tray paper feeding unit

NO.	PARTS CODE	COMPATIBLE	PRICE RANK	NEW MARK	PART RANK	DESCRIPTION	TR NO.	VALID
1	XRESP50-06000		AA		C	E type ring (5mm)		
2	NSFTZ1766FCZZ		AD		C	Pick up roller shaft		
3	MLEVP0589FCZZ		AC		C	Pick up roller lever L		
4	NRŌLR1114FCZZ		AL		C	Pick up roller		
5	NGERH0863FCZZ		AB		C	Pick up roller gear 18T		
6	NGERH0862FCZZ		AB		C	Idle gear 20T		
7	MLEVP0586FCZZ		AC		C	Pick up roller lever R		
8	LSTPP0279FCZZ		AB		C	Stopper		
9	NRŌLR1049FCZZ		AT		C	Paper feeding roller		
10	LPiNS0096FCZZ		AB		C	Pin (ϕ3-12)		
11	NGERH0861FCZZ		AB		C	Paper feed roller gear 18T		
12	XRESP70-08000		AA		C	E type ring (7mm)		
13	NSFTZ1764FCZZ		AM		C	Paper feeding roller shaft		
14	VHPGP1A71A1-1		AG		B	Photo sensor (GP1A71A1)		
15	MLEVP0601FCZZ		AC		C	Sensor lever		
16	LBNDJ0043FCZZ		AA		C	Snap band (SG-130)		
17	MLEVP0588FCZZ		AB		C	Solenoid lever		
18	MSPRC1942FCZZ		AB		C	Solenoid lever spring		
19	RPLU-0278FCZZ		AQ		B	Pick up solenoid		
20	PSHEZ3892FCZZ		AC		C	Protection sheet		
22	MSPRC2589FCZZ		AD		C	Brake spring		
23	DHAi-2049FCZZ		AQ		C	Paper feeding harness 1.2		
24	XEBSD30P12000		AA		C	Screw (3×12)		
25	PCLC-0249FCZZ		AX		B	Transport joint clutch		
26	NBRGC0167FCZZ		AB		C	PF bearing (B-F6-27)		
27	LPiNS0134FCZZ		AB		C	Pin (ϕ2-12)		
28	NBRGC0457FCZZ		AD		C	Bearing (B-F6-340K)		
29	CBRC-0048FC02		AU		C	Main bracket		
30	MSPRP2362FCZZ		AC		C	Earth spring		
31	XEBSD30P08000		AA		C	Screw (3×8)		
32	LPLTM4057FCZZ		AF		C	Reinforce plate		
33	PGiDM1344FCZZ		AM		C	Lower guide		
34	XEBSD40P10000		AA		C	Screw (4×10)		
35	CLEVP0587FC01		AE		C	Roller lever		
36	MSPRC1943FCZ1		AB		C	Roller lever spring		
37	NRŌLR1093FCZZ		AN		C	Roller		
38	NSFTZ1765FCZZ		AH		C	Roller shaft		
39	CCLR-0372FC02		AM		C	Collar		
40	MSPRC2345FCZZ		AG		C	Spring		
41	PCŌVP1142FCZZ		AC		C	Cover		
42	PCLR-0373FCZZ		AC		C	Collar		
43	XPSSJ20-15000		AA		C	Spring pin (ϕ2-15)		
44	MLEVP0695FCZZ		AC		C	H Paper feeding lever		
51	XHBSE40P08000		AA		C	Screw (4×8)		
	(Unit)							
901	DUNT-6546FC12		BP		E	500 tray paper feeding unit		
	♻ DUNT-6546FC14	1	BN		E	500 TRAY PAPER FEEDING UNIT(FROM 1ST LOT)	SP2234	

45 Manual multi paper feeding unit

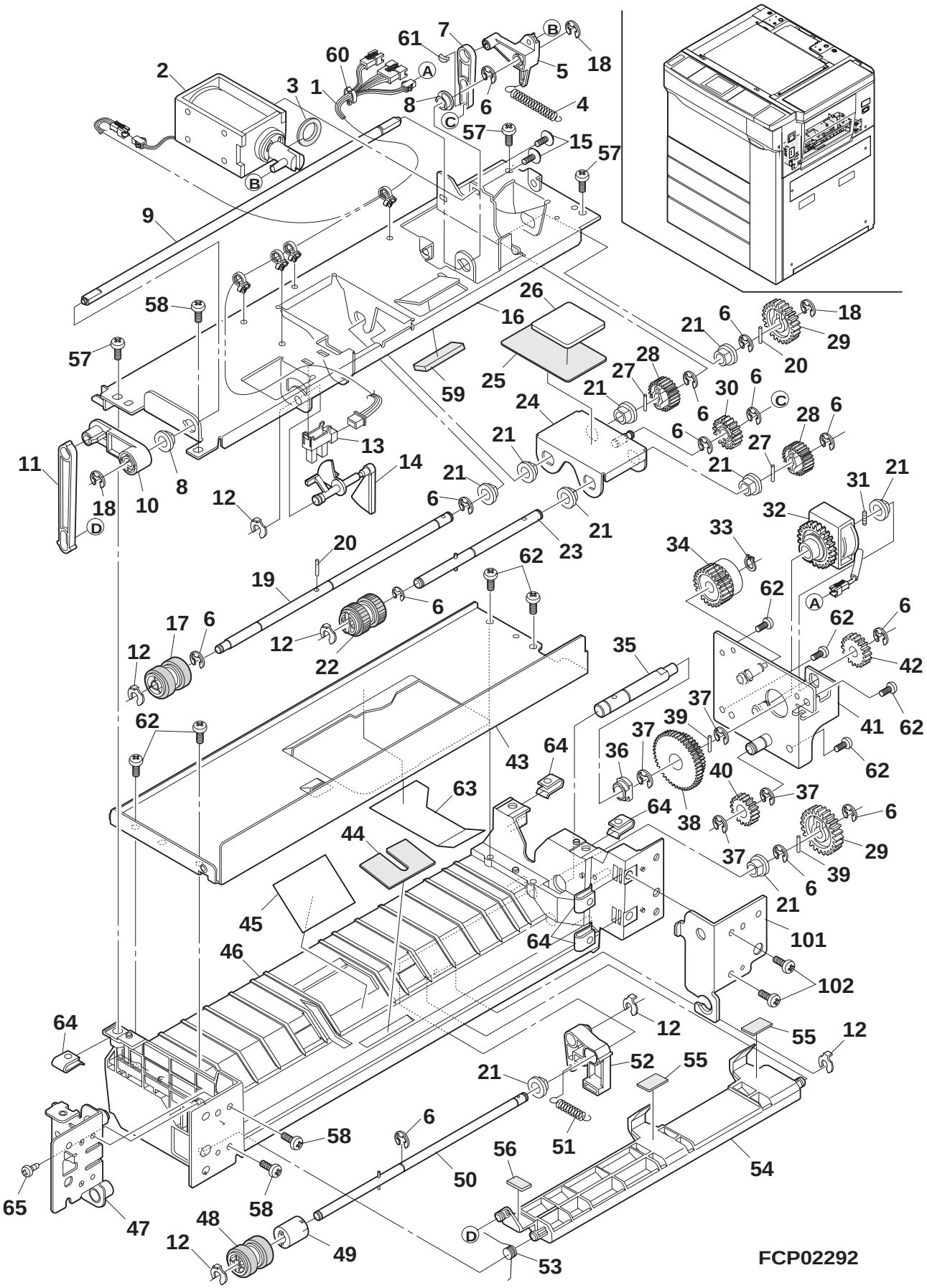

45 Manual multi paper feeding unit

NO.	PARTS CODE	COMPATIBLE	PRICE RANK	NEW MARK	PART RANK	DESCRIPTION	TR NO.	VALID
1	DHAi-2804FC11		AL	N	C	Manual feeding unit harness		
2	RPLU-0290FCZZ		AT		B	Multi solenoid		
3	PGUMS0245FCZZ		AH		C	MPFS rubber		
4	MSPRT2594FCZZ		AD	N	C	PU arm spring		
5	MARMP0239FCZZ		AF	N	C	PU arm		
6	XRESP50-06000		AA		C	E type ring (5mm)		
7	MARMP0163FCZZ		AC		C	PU joint arm		
8	NBRGC0188FCZZ		AB		C	PF bearing		
9	NSFTZ2430FCZZ		AM	N	C	PU arm shaft		
10	MARMP0160FCZZ		AD		C	G drive arm 1		
11	MARMP0161FCZZ		AC		C	G drive arm 2		
12	LSTPP0279FCZZ		AB		C	Stopper		
13	VHPGP1A71A1-1		AG		B	Photo sensor (GP1A71A1)		
14	MLEVP0623FCZZ		AD		C	Lever ACC		
15	XBPSD30P06KS0		AA		C	Screw (3×6KS)		
16	LPLTM5358FCZZ		AN	N	C	Paper feeding joint plate		
17	NRŌLR0955FCZZ		AT		C	Paper feeding roller		
18	XRESP30-04000		AA		C	E type ring (3mm)		
19	NSFTZ2429FCZZ		AL	N	C	Paper feeding shaft		
20	LPiNS0096FCZZ		AB		C	Pin (φ3×12)		
21	NBRGM1040HCZZ		AC		B	Bearing		
22	NRŌLR0956FCZZ		AM		C	PU roller		
23	CSFTZ1933FC01		AM	N	C	PU shaft		
24	CPLTM4326FC01		AK		C	PU joint plate		
25	PGUMS0243FCZZ		AN		C	PU rubber		
26	LPLTM4519FCZZ		AD		C	PU balancer plate		
27	LPiNS0155FCZZ		AA		C	Pin (φ3-10)		
28	NGERH0236FCZZ		AC		C	Stir gear 18T		
29	NGERH0209FCZ1		AB		C	Delivery roller gear 24T		
30	NGERH0118FCZZ		AC		C	Idle gear		
31	LX-BZ0193FCZZ		AB		C	Screw (3×4)		
32	PCLC-0237FCZ2		AX	N	B	Joint clutch		
33	PRNGP0019FCZZ		AA		C	V ring (GTW-6)		
34	NGERH1218FCZZ		AF	N	C	Cup ring gear		
35	NSFTZ2431FCZZ		AK	N	C	Multi drive shaft		
36	NBRGC0319FCZZ		AD		C	Bush bearing		
37	XRESP70-08000		AA		C	E type ring (7mm)		
38	NGERH1220FCZZ		AF	N	C	Gear		
39	LPiNS0165FCZZ		AB		C	Pin (φ2-8)		
40	NGERH1225FCZZ		AP	N	C	Gear 20T		
41	CPLTM5359FC01		AQ	N	C	Drive plate		
42	NGERH1219FCZZ		AE	N	C	Idle gear		
43	PGiDH1770FCZZ		AN	N	C	MF upper paper guide		
44	PSHEZ4548FCZZ		AF	N	C	PG pad sheet		
45	PSHEP3306FCZZ		AB		C	Pad sheet		
46	LDAiU0570FCZZ		BA	N	C	PF base plate		
47	CHLDZ1352FC01		AM	N	C	Tray fulcrum holder F		
48	NRŌLR0964FCZZ		AP		C	Reversing roller		
49	PCLC-0271FCZZ		AU	N	B	Clutch		
50	CSFTZ2428FC01		AN	N	C	Reversing shaft		
51	MSPRT2595FCZZ		AD	N	C	Pressure spring		
52	LPLTP5235FCZZ		AE		C	Reversing plate C		
53	MSPRC2596FCZZ		AD	N	C	Gate spring		
54	PGiDM1769FCZZ		AL	N	C	Multi paper feed gate		
55	PMLT-0922FCZZ		AE		C	Gate cushion		
56	PMLT-1138FCZZ		AB	N	C	Gate support cushion		
57	XUBSD40P10000		AA		C	Screw (4×10)		
58	XHBSD40P08000		AA		C	Screw (4×8)		
59	PMLT-1139FCZZ		AC	N	C	PU upper cushion		
60	LHLDZ1019ACZZ		AA		C	Holder (UAMS-05-2)		
61	PMLT-1140FCZZ		AA	N	C	PU joint cushion		
62	XEBSD40P08000		AA		C	Screw (4×8)		
63	PSHEP4488FCZZ		AD	N	C	PG upper sheet		
64	LX-NZ0088FCZZ		AC		C	Nut		
65	XHBSD40P10000		AA		C	Screw (4×10)		
101	CHLDZ1351FC01		AK	N	C	Manual feed tray fulcrum holder R		
102	XHBSD40P08000		AA		C	Screw (4×8)		
	(Unit)							
901	DUNT-6905FCZZ		BW	N	E	Multi paper feeding unit		

47 Tray assembly drawer unit

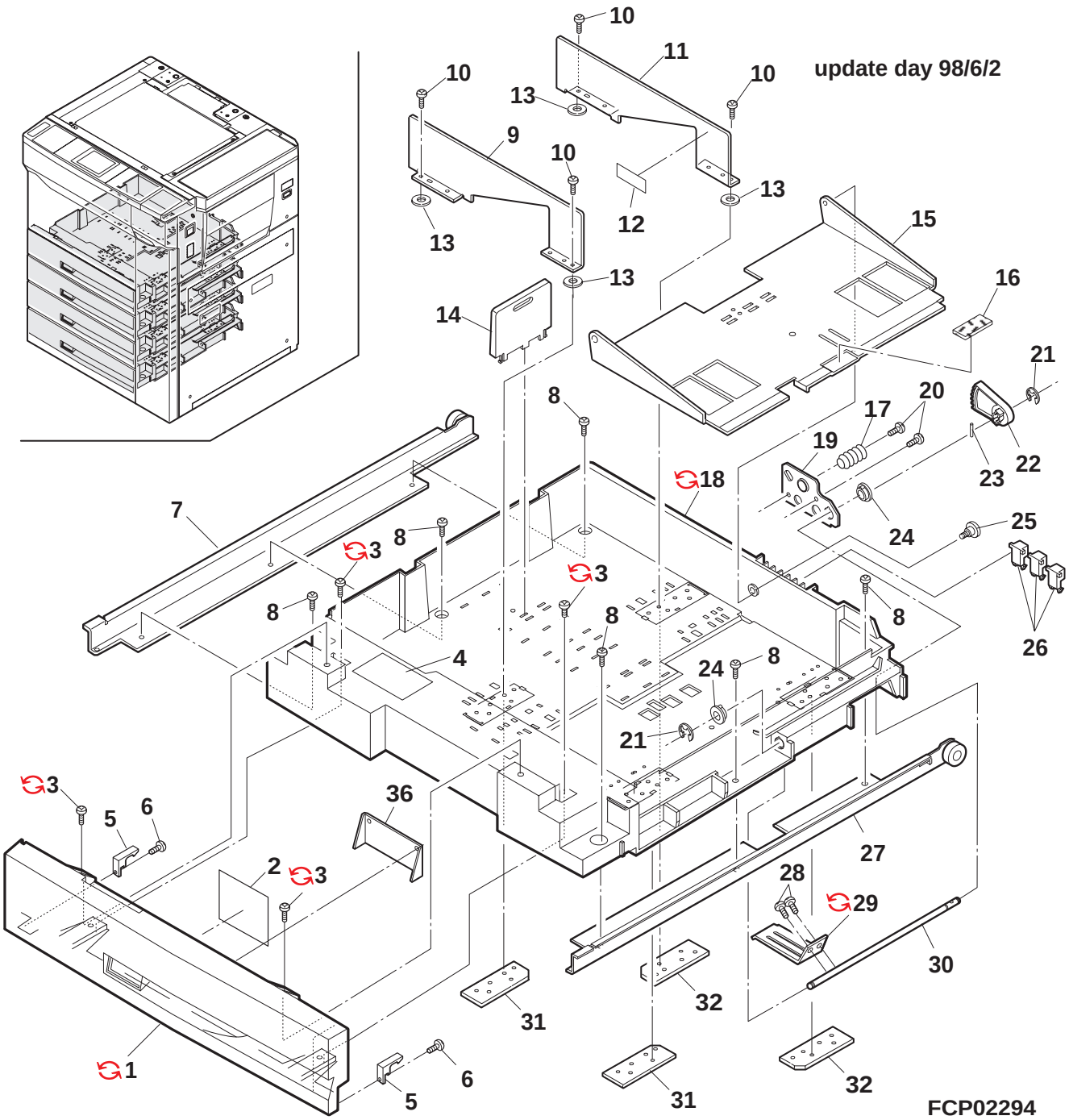

47 Tray assembly drawer unit

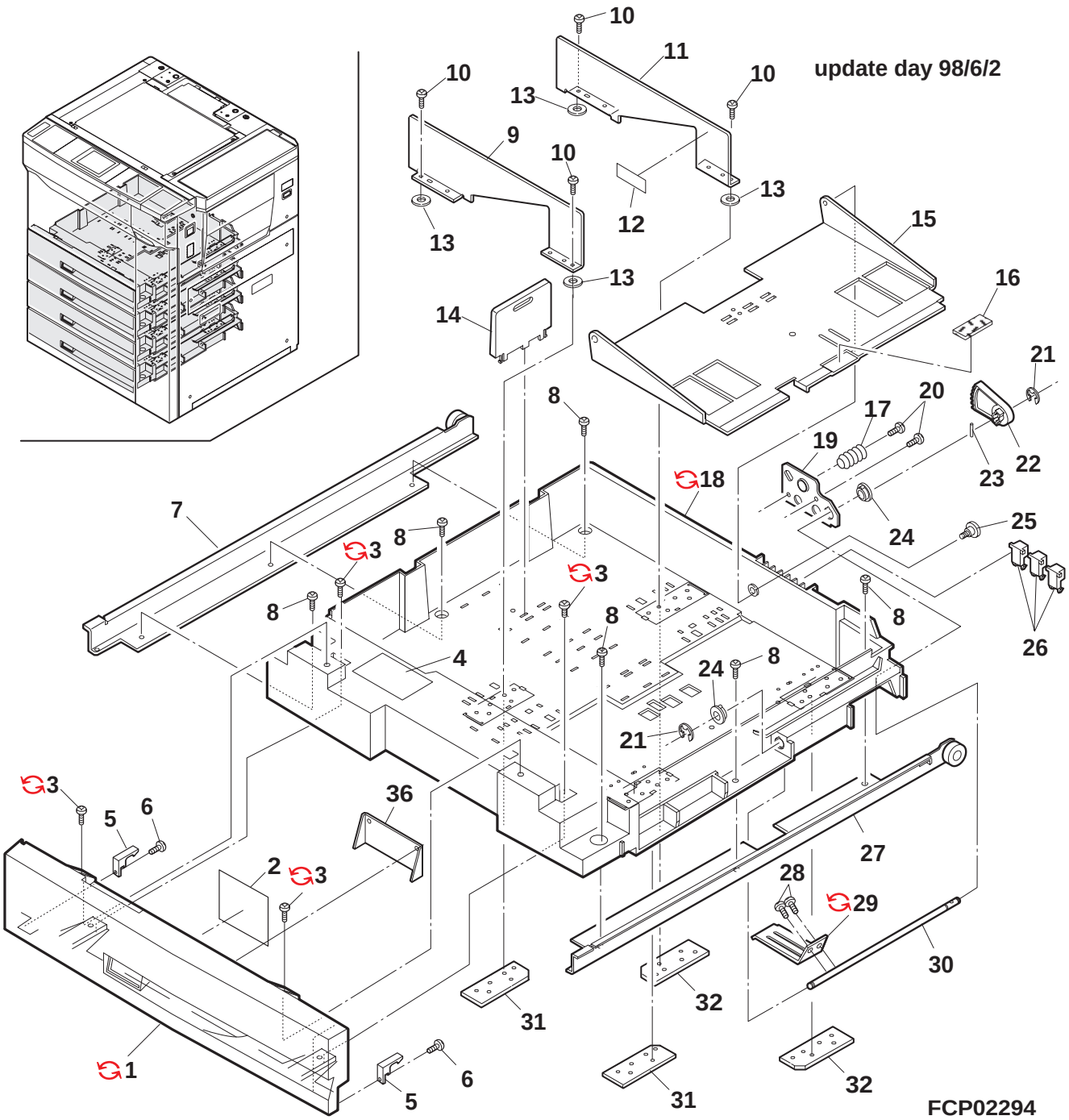

47 Tray assembly drawer unit

NO.	PARTS CODE	COMPATIBLE	PRICE RANK	NEW MARK	PART RANK	DESCRIPTION	TR NO.	VALID
1	JHNDP0107FCZZ		AW		C	Tray handle		
	♻ JHNDP0107FCZ1	5	AX		C	TRAY HANDLE	SP2248	97/12/01
2	LPLTP4070FCZ8		AK	N	C	Tray size display plate (Japan only)		
	LPLTP4070FC11		AK	N	C	Tray size display plate (Inch series)		
	LPLTP4070FCZ1		AK		C	Tray size display plate (U,Kingdom only)		
	LPLTP4070FCZ9		AK	N	C	Tray size display plate (Export‥AB Seriesüj		
3	XBTSE40P08000		AA		C	Screw (4×8)		
	♻ XEBSE40P10000	5	AA		C	SCREW(Q'TY:4)	SP2248	97/12/01
4	TLABZ3105FCZZ		AD		C	Tray instruction label		
5	PTME-0223FCZZ		AD		C	Tray lock pawl		
6	XEPSD40P10000		AA		C	Screw (4×10)		
7	CRALM0111FC02		AP	N	C	Tray rail L (small)		
8	XHTSE40P07000		AA		C	Screw (4×7)		
9	LPLTM4039FCZZ		AL		C	Side plate F		
10	XBPSD40P08000		AA		C	Screw (4×8)		
11	CPLTM4040FC01		AP		C	Side plate R		
12	TLABZ3020FCZZ		AC		C	Indication label		
13	LX-WZ0317FCZZ		AA		C	Vinyl washer (ϕ4)		
14	LPLTP4023FCZZ		AD		C	Rear plate		
15	LPLTM4041FCZZ		AT		C	Rotation plate		
16	PSHEZ3130FCZZ		AB		C	Rotation plate sheet		
17	QEARB0056FCZZ		AA		C	Earth spring		
18	GCASP0156FCZZ		BB		D	Tray drawer case		
	♻ GCASP0156FCZ1	5	BB		D	TRAY DRAWER CASE	SP2248	97/12/01
19	LPLTM4044FCZZ		AF		C	Drawer base plate		
20	XEPSD40P10000		AA		C	Screw (4×10)		
21	XRESP60-08000		AA		C	E type ring (6mm)		
22	NGERH0859FCZZ		AD		C	Gear		
23	LPiNS0157FCZZ		AB		C	Pin (M3L14)		
24	NBRGC0167FCZZ		AB		C	PF bearing (B-F6-27)		
25	LX-BZ0138FCZZ		AB		C	Screw		
26	LDAiU0449FCZZ		AC		C	Tray size detection block		
27	CRALM0110FC02		AP	N	C	Tray rail R (small)		
28	XBPSD30P08KS0		AA		C	Screw (3×8KS)		
29	LPLTM4043FCZZ		AF		C	Lift plate		
	♻ LPLTM4043FCZ1		AG		C	LIFT PLATE(FROM 1ST LOT)	SP2266	
30	NSFTZ1760FCZZ		AM		C	Lift shaft		
31	LPLTM4042FCZZ		AF		C	Side plate fixing plate		
32	LPLTM4042FCZ1		AG		C	Side plate fixing plate R		
36	PFTA-0096FCZZ		AF		C	Tray handle cover		
	(Unit)							
901	CCASP0156FC20		BQ	N	E	B4 Tray drawer case unit (Japan only)		
	CCASP0156FC21		BQ	N	E	A3 Tray drawer case unit (Japan only)		
	CCASP0156FC22		BQ	N	E	A4 Tray drawer case unit (Japan only)		
	CCASP0156FC23		BQ	N	E	B5 tray drawer case unit (Japan only)		
	CCASP0156FC25		BQ	N	E	LT-R Tray drawer case unit (Inch series)		
	CCASP0156FC24		BQ	N	E	RG Tray assembly drawer case unit (Inch series)		
	CCASP0156FC28		BQ	N	E	W-letter Tray drawer case unit (Inch series)		
	CCASP0156FC34		BR		E	A4R Tray drawer case unit (U,Kingdom only)		
	CCASP0156FC38		BR		E	A4 Tray drawer case unit (U,Kingdom only)		
	CCASP0156FC41		BR		E	A3 Tray drawer case unit (U,Kingdom only)		
	CCASP0156FC26		BQ	N	E	A4R Tray drawer case unit (Export‥AB Series)		
	CCASP0156FC27		BQ	N	E	A4 Tray drawer case unit (Export‥AB Series)		
	CCASP0156FC29		BQ	N	E	A3 Tray drawer case unit (Export‥AB Series)		

48 Packing material & Accessories

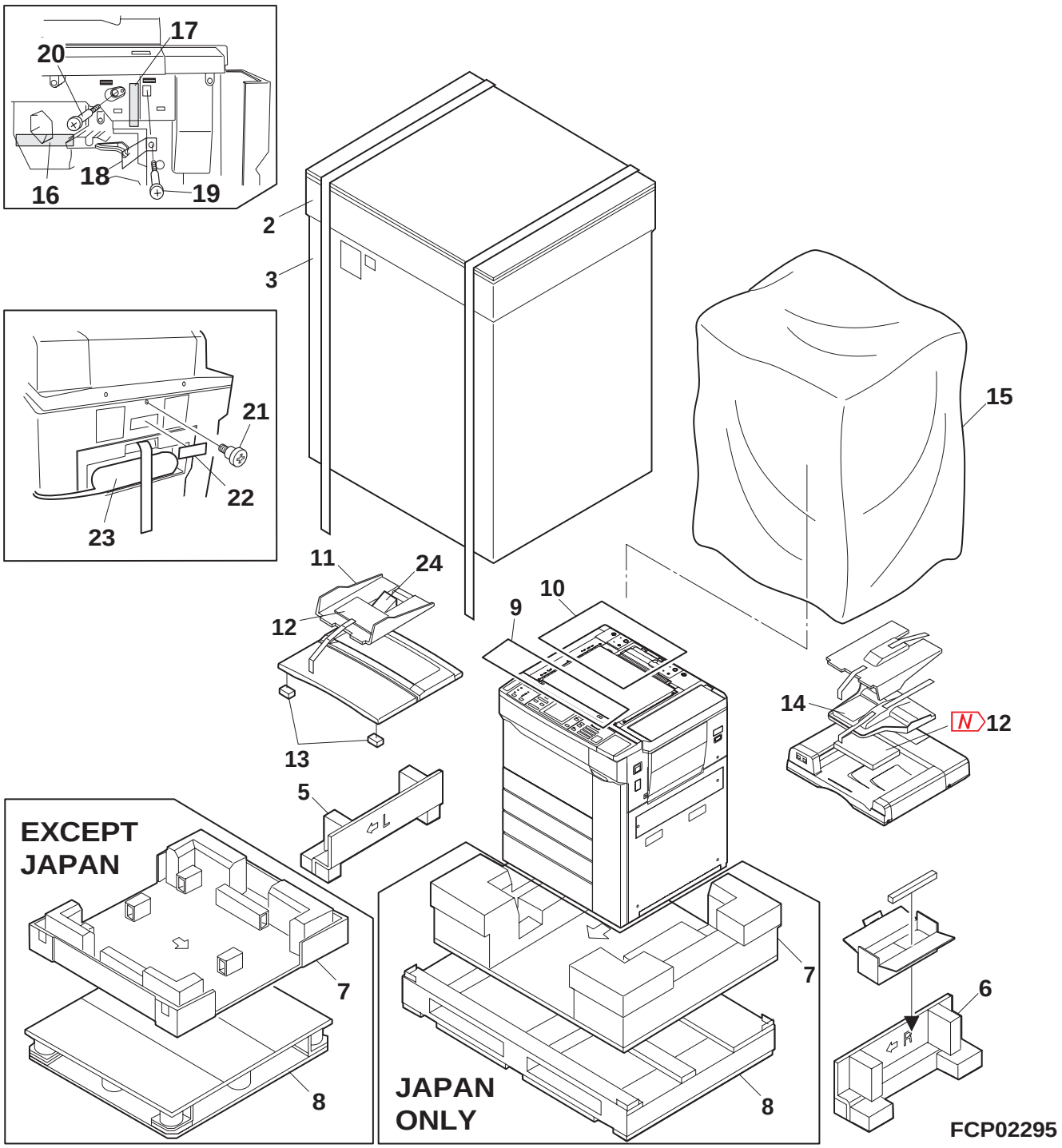

48 Packing material & Accessories

NO.	PARTS CODE	COMPATIBLE	PRICE RANK	NEW MARK	PART RANK	DESCRIPTION	TR NO.	VALID
2	SPAKA5213FCZZ		AY		D	Top case		
3	SPAKC5761FCZZ		BE	N	D	Packing case (Japan only)		
	SPAKC5727FCZZ		BE	N	D	Packing case (Europe)		
	SPAKC5726FC11		BE	N	D	Packing case (Except Japan,Europe)		
5	SPAKA5728FCZZ		AY	N	D	Top packing cushion LA (Except Europe)		
	SPAKA5730FCZZ		AY	N	D	Top packing cushion LB (For Europe)		
6	SPAKA5729FCZZ		AY	N	D	Top packing cushion RB (Japan,U.S.A.,CANADA,Australia,New Zealand,LAG2,3,4,Brazil, Thailand,Sri Lanka,Singapore,Malaysia,Indonesia,Hong Kong)		
	SPAKA5743FCZZ		BA	N	D	Top packing cushion RC (Other countries)		
	SPAKA5731FCZZ		AY	N	D	Top packing cushion RB (For Europe)		
7	CPAKA5752FC01		BL	N	D	Bottom case (Japan only)		
	CPAKA5211FC02		BC		D	Bottom case (Except Japan)		
8	CPAKA5751FC01		BN	N	D	Skid (Japan only)		
	SPAKW5219FCZZ		BT		D	Skid (Except Japan)		
9	PSHEZ2097FCZZ		AF		C	Operation protect sheet		
10	SPAKA5732FCZZ		AG	N	D	ADF protect sheet (Japan U.S.A.,CANADA,Europe,Australia,New Zealand,LAG2,3,4,Brazil, Thailand,Sri Lanka,Singapore,,Malaysia,Indonesia,Hong Kong)		
11	LSŌU-0054FCG4		AZ		D	Delivery tray (Except U.S.A.,CANADA,Europe,Australia,New Zealand)		
12	N TiNSE1664FCZZ		BA	N		OPERATION MANUAL(FROM 1ST LOT)(HONG KONG)	SP2266	
	N TiNSE1681FCZZ	6	AH	N		OPERATOR'S MANUAL SF-S56(ENGLISH(USA))	SP2279	98/01/01
	N TiNSJ1680FCZZ	6	ZZ	N		OPERATOR'S MANUAL SF-S56(JAPANESE)	SP2279	98/01/01
	N TiNSE1682FCZZ	6	AQ	N		OPERATOR'S MANUAL SF-S56(ENGLISH)	SP2279	98/03/01
	N TiNSE1693FCZZ	6	AM	N		OPERATOR'S MANUAL SF-S56(ENGLISH(HONG KONG))	SP2279	98/03/01
	N TiNSF1684FCZZ	6	AQ	N		OPERATOR'S MANUAL SF-S56(FRENCH)	SP2279	98/03/01
	N TiNSG1683FCZZ	6	AQ	N		OPERATOR'S MANUAL SF-S56(GERMAN)	SP2279	98/03/01
	N TiNSH1687FCZZ	6	AQ	N		OPERATOR'S MANUAL SF-S56(DUTCH)	SP2279	98/03/01
	N TiNSi1686FCZZ	6	AQ	N		OPERATOR'S MANUAL SF-S56(ITALIAN)	SP2279	98/03/01
	N TiNSS1685FCZZ	6	AQ	N		OPERATOR'S MANUAL SF-S56(SPANISH)	SP2279	98/03/01
	N TiNSW1688FCZZ	6	AQ	N		OPERATOR'S MANUAL SF-S56(SWEDISH)	SP2279	98/03/01
	TiNSJ1593FCZZ		BC	N	D	Operation manual (Japanese)		
	TiNSE1594FCZZ		AW	N	D	Operation manual (U.S.A.)		
	TiNSE1595FCZZ		BA	N	D	Operation manual (English)		
	TiNSE1601FCZZ		BG	N	D	Operation manual (U.Kingdom)		
	TiNSF1597FCZZ		BG	N	D	Operation manual (French)		
	TiNSG1596FCZZ		BG	N	D	Operation manual (German)		
	TiNSS1598FCZZ		BG	N	D	Operation manual (Spanish)		
	TiNSi1599FCZZ		BG	N	D	Operation manual (Italian)		
	TiNSR1603FCZZ		BG	N	D	Operation manual (Russian)		
	TiNSH1602FCZZ		BG	N	D	Operation manual (Dutch)		
	TiNSZ1600FCZZ		BG	N	D	Operation manual (Arabic)		
	TiNSE1606FCZZ		AM	N	D	Operation guide manual (U.S.A.)		
	TiNSJ1605FCZZ		AT	N	D	Operation guide manual (Japanese)		
13	SPAKA4693FCZZ		AE		D	OC protect packing cushion		
14	SPAKA5210FCZZ		AF		D	Tray protect packing cushion (Japan U.S.A.,CANADA,Europe,Australia,New Zealand,LAG2,3,4,Brazil, Thailand,Sri Lanka,Singapore,Malaysia,Indonesia, Hong Kong)		
15	SSAKH9940QCZZ		AL		D	Vinyl bag (1440×1440mm)		
16	TCADZ1223FCZZ		AD		D	Caution paper DR		
17	TLABH2967FCZ1		AC		D	Label,optical unit fixing screw		
18	PSHEP4051FCZZ		AC		D	4,5 mirror lock sheet		
19	LX-BZ0756FCZZ		AD		C	4,5 mirror fixing screw		
20	LX-BZ0578FCZZ		AC		C	Lens fixing screw		
21	LX-BZ0649FCZZ		AB		C	2,3 mirror fixing screw		
22	TCADZ1178FCZZ		AB		D	Caution card		
23	SPAKA1624FCZZ		AB		D	AC cord sleeve		
24	PGiDM1620FCZZ		AT		C	Tray sub guide (Japan only)		
51	CCASZ0067FC02		AM		D	Maintenance card (Japan only)		
	CCASZ0067FC01		AD		D	Maintenance card (Except Japan)		
52	TLABZ4179FCZZ		AF	N	C	Size display label (AB series‥Except Japan)		
	☒ TLABZ4179FCZZ				C	SIZE DISPLAY LABEL(FROM 1ST LOT)(U.K.)	SP2266	
53	TCADS0497FCZZ		AH		D	Card (Japan only)		
	TCADZ2001QCZA		AE		D	Card (Australia New Zealand)		
	TCADS0649FCZZ		AM		D	Card (For Europe‥Except U,Kingdom)		
	TCADZ1308FCZZ		AF		D	Card (Russia only)		
54	TCADZ1076FCZ2		AE		D	MSDS card (U.S.A.,CANADA,U,Kingdom)		
55	UKŌGZ0002FCZZ		AD		D	Vinyl bag (Japan only)		
56	PSHEZ1394FCZZ		AC		D	Vinyl sheet (Japan only)		
57	TCADS0764FCZZ		AE		D	Warranty resist card (U.Kingdom only)		
58	LX-BZ0108FCZZ		AC		C	Screw (For Cassette A5)		
59	LX-WZ0317FCZZ		AA		C	Vinyl washer (φ4)(For Cassette A5)		
60	LX-WZ0326FCZZ		AA		C	Washer for MB cushion		
61	XEBSD40P12000		AA		C	Tray rotation plate fixing screw (4×12)		
62	SPAKA5335FCZZ		AF		D	Packing cushion A		
63	SPAKA4393FCZZ		AD		D	Protect cushion		
64	LPiN-0277FCZZ		AB		C	Slide pin		
65	TLABH1512FCZZ		AB		C	Caution paper (Japan only)		
	TLABH1457FCZZ		AB		C	Caution paper (Except Japan)		
66	SPAKA5762FCZZ		BB	N	D	Reinforce sleeve J (Japan only)		
	SPAKA5734FCZZ		BB	N	D	Reinforce sleeve B (For Europe)		
	SPAKA5733FCZZ		BB	N	D	Reinforce sleeve A (Except Europe,Japan)		

48 Packing material & Accessories

NO.	PARTS CODE	COMPATIBLE	PRICE RANK	NEW MARK	PART RANK	DESCRIPTION	TR NO.	VALID
67	SSAKA2440QCZZ		AB		D	Vinyl bag (280×410mm)		
68	TLABZ0248FCZZ		AB		C	Caution Label (Japan only)		
	TLABZ0241FCZZ		AB		C	Caution Label (Except Japan)		
69	XBBSE40P16000		AB		C	Screw (4×16)		
701	N TLABH4259FCZZ		AH	N		INDICATION LABEL(FROM 1ST LOT)(HONG KONG)	SP2266	
702	N TiNSZ1689FCZZ	6	AQ	N		OPERATOR'S MANUAL SF-S56(ARABIC)	SP2279	98/03/01
703	N TiNSE1739FCZZ	6	AE	N		PAMPHLETS(ENGLISH)(GERMANY ARIA)	S249	98/04/01
	N TiNSE1739FCZZ	6	AE	N		PAMPHLETS(ENGLISH)(GERMANY)	S249	98/04/01
	N TiNSE1739FCZZ	6	AE	N		PAMPHLETS(ENGLISH)(U.K.)	S249	98/04/01
	N TiNSF1741FCZZ	6	AE	N		PAMPHLETS(FRENCH)(GERMANY ARIA)	S249	98/04/01
	N TiNSG1740FCZZ	6	AE	N		PAMPHLETS(GERMAN)(GERMANY ARIA)	S249	98/04/01
	N TiNSG1740FCZZ	6	AE	N		PAMPHLETS(GERMAN)(GERMANY)	S249	98/04/01
	N TiNSH1743FCZZ	6	AE	N		PAMPHLETS(DUTCH)(GERMANY ARIA)	S249	98/04/01
	N TiNSi1744FCZZ	6	AE	N		PAMPHLETS(ITALIAN)(GERMANY ARIA)	S249	98/04/01
	N TiNSS1742FCZZ	6	AE	N		PAMPHLETS(SPANISH)(GERMANY ARIA)	S249	98/04/01
	N TiNSW1745FCZZ	6	AE	N		PAMPHLETS(SWEDISH)(GERMANY ARIA)	S249	98/04/01
	N TiNSE1746FCZZ	6	AG	N		PAMPHLETS(ENGLISH)(CANADA)	S249	98/05/01
	N TiNSE1748FCZZ	6	AE	N		PAMPHLETS(ENGLISH)(AUSTRALIA)	S249	98/05/01
	N TiNSF1747FCZZ	6	AE	N		PAMPHLETS(FRENCH)(CANADA)	S249	98/05/01

49 Main PWB

NO.	PARTS CODE	COMPATIBLE	PRICE RANK	NEW MARK	PART RANK	DESCRIPTION	TR NO.	VALID
1	PRDAF0047FCZZ		AC		C	Heat sink (SP425C) [for IC016,017,052]		
2	QCNCM0539FCZZ		AE		C	Connector (24pin) [CN109]		
3	QCNCM0842FCZZ		AB		C	Connector (36pin) [CN102]		
4	QCNCW0379FCZZ		AD		C	Connector (20pin) [CN106]		
5	QCNCW0382FCZZ		AE		C	Connector (34pin) [CN101]		
6	QCNCW0383FCZZ		AE		C	Connector (40pin) [CN103,107,110]		
7	QCNCW0450FCZZ		AC		C	Connector (10pin) [CN108]		
8	QCNCW0849FCZZ		AF		C	Connector (40pin) [CN104]		
9	QCNCW0885FCZZ		AG		C	Connector (1-171825-2) [CN112]		
10	QCNCW0886FCZZ		AG		C	Connector (28Pin) [CN105,111]		
11	QSŌCZ2051SC32		AC		C	IC socket (32pin) [for IC005]		
12	QSŌCZ6428ACZZ		AE		C	IC socket (28pin) [for IC006]		
13	RCRS-0010FCZZ		AK		B	Crystal (9.83MHz) [X002]		
14	RCRS-0027FCZZ		AF		B	Crystal (CST12.2MTW) [X001]		
15	RMPTC4103QCJB		AD		B	Block resistor (10KΩ×4 1/8W ±5%) [BR109,111,115]		
16	RMPTC4472QCJB		AB		B	Block resistor (4.7KΩ×4 1/8W ±5%) [BR103,105,106,120]		
17	RMPTC8103QCJB		AC		B	Block resistor (10KΩ×8 1/8W ±5%) [BR013,014,101,102,107,108,110,112,113,114,116~119]		
18	RMPTC8472QCJB		AB		B	Block resistor (4.7KΩ×8 1/8W ±5%) [BR104]		
19	VCCCTV1HH101J		AA		C	Capacitor (50WV 100pF) [C145]		
20	VCCCTV1HH220J		AA		C	Capacitor (50WV 22pF) [C004,005]		
21	VCEAFU1HN105M		AD		C	Capacitor (50WV 1.0μF) [C036,065~067]		
22	VCEAGU1CW476M		AB		C	Capacitor (16WV 47μF) [C034,035,061]		
23	VCEAGU1CW477M		AC		C	Capacitor (16WV 470μF) [C063]		
24	VCEAGU1EW477M		AD		C	Capacitor (25WV 470μF) [C064]		
25	VCEAGU1VW106M		AA		C	Capacitor (35WV 10μF) [C146,147]		
26	VCEAGU1VW108M		AE		C	Capacitor (35WV 1000μF) [C058]		
27	VCEAGU1VW476M		AB		C	Capacitor (35WV 47μF) [C060,171]		
28	VCEAGU1VW477M		AD		C	Capacitor (35WV 470μF) [C059,062]		
29	VCKYTQ1HF104Z		AA		C	Capacitor (50WV 0.1μF) [C058,148]		
30	VCKYTV1HB102K		AA		C	Capacitor (50WV 1000pF) [C002,007~014,020,025~033,038]		
	VCKYTV1HB102K		AA		C	Capacitor (50WV 1000pF) [C043,044,047,054~056,069~144]		
31	VCKYTV1HB223K		AA		C	Capacitor (50WV 0.022μF) [C001,003,006,015~019,021~024]		
	VCKYTV1HB223K		AA		C	Capacitor (50WV 0.022μF) [C037,039~042,045,046,048~052]		
	VCKYTV1HB223K		AA		C	Capacitor (50WV 0.022μF) [C057,149~155,157~170]		
32	VCQYNU1HM103K		AA		C	Capacitor (50WV 0.010μF) [C068,173,174]		
33	VHDDAN202K/-1		AB		B	Diode (DAN202K) [D004,006~008,021,036,037,044,046,047,048,049,050]		
34	VHDDAN217//-1		AC		B	Diode (DAN217) [D005,009,016]		
35	VHDDAP202K/-1		AB		B	Diode (DAP202K) [D001,010~012,014,017,020,034,035,038,039]		
36	VHDDSM1D1//-U		AB		B	Diode (DSM1D1) [D018,019,026~033,040~043]		
37	VHDDSS133//-1		AA		B	Diode (DSS133) [D022~025,045,051,052]		
38	VHDMA704A//-1		AC		B	Diode (MA704A) [D002,003,013,015]		
39	VHEHZ6A1///-1		AB		B	Zener diode (HZ6A1) [ZD001]		
40	VHERD22FB//-1		AD		B	Zener diode (RD22FB) [ZD004,005,006]		
41	VHERD4.3EL3-1		AB		B	Zener diode (RD4.3EL3) [ZD002,003]		
42	VHiAT28C64B-1		AZ		B	IC (AT28C64B) [IC006]		
43	VHiFH45560/-1		BA		B	IC (FH45560) [IC001]		
44	VHiHD8-570L03		BG		B	IC (HD8-570L03) [IC002]		
45	VHiLC3564SM10		AS		B	IC (LC3564SM10) [IC007]		
	VHiLC3564BM-1	1	AS		B	IC	SP2293	98/04/01
46	VHiLM339NS/-1		AD		B	IC (LM339NS) [IC012]		
47	VHiLM358PS/-S		AC		B	IC (LM358PS) [IC013,019]		
48	VHiLM393PS/-S		AC		B	IC (LM393PS) [IC018]		
49	VHiM66500FP-1		AT		B	IC (M66500FP) [IC010,011]		
50	VHiSN74HC08NS		AD		B	IC (SN74HC08NS) [IC015]		
51	VHiSN74HC139S		AF		B	IC (SN74HC139S) [IC003,004]		
52	VHiSN74LS04NS		AF		B	IC (SN74LS04) [IC208]		
53	VHiSN74LS123N		AL		B	IC (SN74LS123N) [IC014]		
54	VHiSTA408A/-1		AM		B	IC (STA408A) [IC035]		
55	VHiSTA457C/-1		AH		B	IC (STA457C) [IC033]		
56	VHiSTA471A/-1		AK		B	IC (STA471A) [IC041~045]		
57	VHiTA7291S/-1		AF		B	IC (TA7291S) [IC036,051]		
58	VHiTC74HC14FN		AH		B	IC (TC74HC14AF) [IC009,029,205,206]		
59	VHiTC74HC253F		AG		B	IC (TC74HC253F) [IC021~IC028]		
60	VHiTD62504/-1		AG		B	IC (TD62504) [IC034,046,047]		
61	VHiULN2003AN1		AE		B	IC (ULN2003AN) [IC037~040,048~050]		
62	VHiU78M05AHF1		AF		B	IC (U78M05AHF1) [IC017]		
63	VHiU78M10AHF1		AG		B	IC (U78M10AHF1) [IC016]		
64	VHi27C02060FC		BA	N	B	IC (27C02060FC) [IC112]		

49 Main PWB

NO.	PARTS CODE	COMPATIBLE	PRICE RANK	NEW MARK	PART RANK	DESCRIPTION	TR NO.	VALID
65	VHi71054GB3B4		AP		B	IC (71054GB3B4) [IC008]		
66	VHPSLR322VC3F		AC		B	LED (SLR322VC3F) [LED001]		
67	VRD-RB2HY471J		AA		C	Resistor (1/2W 470Ω ±5%) [R116]		
68	VRD-RC2EY201J		AA		C	Resistor (1/4W 200Ω ±5%) [R138~140]		
69	VRD-RC2EY221J		AA		C	Resistor (1/4W 220Ω ±5%) [R089]		
70	VRNRC2EK1102F		AA		C	Resistor (1/4W 11.0KΩ ±1%) [R080,084]		
71	VRNRC2EK1502F		AA		C	Resistor (1/4W 15.0KΩ ±1%) [R092,093]		
72	VRNRC2EK3900F		AA		C	Resistor (1/4W 390Ω ±1%) [R018]		
73	VRNRC2EK4700F		AA		C	Resistor (1/4W 470Ω ±1%) [R013]		
74	VRNRC2EK4701F		AA		C	Resistor (1/4W 4.70KΩ ±1%) [R081,085]		
75	VRNRC2EK5100F		AA		C	Resistor (1/4W 510Ω ±1%) [R015]		
76	VRNRC2EK5102F		AA		C	Resistor (1/4W 51.0KΩ ±1%) [R079,083]		
77	VRNRC2EK5600F		AA		C	Resistor (1/4W 560Ω ±1%) [R014]		
78	VRNRC2EK6200F		AA		C	Resistor (1/4W 620Ω ±1%) [R016]		
79	VRNRC2EK6201F		AA		C	Resistor (1/4W 6.2KΩ ±1%) [R082,086]		
80	VRNRC2EK7500F		AA		C	Resistor (1/4W 750Ω ±1%) [R017]		
81	VRS-RE3HG240J		AE		C	Resistor (5W 24Ω ±5%) [R090,091]		
82	VRS-TS2AD101J		AA		C	Resistor (1/10W 100Ω ±5%) [R025,056]		
83	VRS-TS2AD102F		AA		C	Resistor (1/10W 1.0KΩ ±1%) [R031,060]		
84	VRS-TS2AD102J		AA		C	Resistor (1/10W 1.0KΩ ±5%) [R028,071~073,075~078,109~112]		
85	VRS-TS2AD103F		AA		C	Resistor (1/10W 10KΩ ±1%) [R063]		
86	VRS-TS2AD103J		AA		C	Resistor (1/10W 10KΩ ±5%) [R001~003,019~024,033,036,045,048]		
	VRS-TS2AD103J		AA		C	Resistor (1/10W 10KΩ ±5%) [R051,059,067,068,087,088,113,114,141~146]		
87	VRS-TS2AD104F		AA		C	Resistor (1/10W 100KΩ ±1%) [R029]		
88	VRS-TS2AD104J		AA		C	Resistor (1/10W 100KΩ ±5%) [R065,066,069]		
89	VRS-TS2AD122J		AA		C	Resistor (1/10W 1.2KΩ ±5%) [R005~012,102~106,117~136,147]		
90	VRS-TS2AD152F		AA		C	Resistor (1/10W 1.5KΩ ±1%) [R052,054,058]		
91	VRS-TS2AD152J		AA		C	Resistor (1/10W 1.5KΩ ±5%) [R094]		
92	VRS-TS2AD153F		AA		C	Resistor (1/10W 15KΩ ±1%) [R057,070]		
93	VRS-TS2AD203J		AA		C	Resistor (1/10W 20KΩ ±5%) [R050]		
94	VRS-TS2AD222J		AA		C	Resistor (1/10W 2.2KΩ ±5%) [R047]		
95	VRS-TS2AD224J		AA		C	Resistor (1/10W 220KΩ ±5%) [R034]		
96	VRS-TS2AD242F		AB		C	Resistor (1/10W 2.4KΩ ±1%) [R037]		
97	VRS-TS2AD242J		AA		C	Resistor (1/10W 2.4KΩ ±5%) [R098,099]		
98	VRS-TS2AD274F		AA	N	C	Resistor (1/10W 270KΩ ±1%) [R049]		
99	VRS-TS2AD332F		AA		C	Resistor (1/10W 3.3KΩ ±1%) [R064]		
100	VRS-TS2AD392J		AA		C	Resistor (1/10W 3.9KΩ ±5%) [R115]		
101	VRS-TS2AD393J		AA		C	Resistor (1/10W 39KΩ ±5%) [R055]		
102	VRS-TS2AD472J		AA		C	Resistor (1/10W 4.7KΩ ±5%) [R035,095,100,101]		
103	VRS-TS2AD473F		AA		C	Resistor (1/10W 47KΩ ±1%) [R026,038,043]		
104	VRS-TS2AD473J		AA		C	Resistor (1/10W 47KΩ ±5%) [R039~041,107,108]		
105	VRS-TS2AD511J		AA		C	Resistor (1/10W 510Ω ±5%) [R004]		
106	VRS-TS2AD560J		AA		C	Resistor (1/10W 56Ω ±5%) [R046]		
107	VRS-TS2AD562F		AA		C	Resistor (1/10W 5.6KΩ ±1%) [R042]		
108	VRS-TS2AD562J		AA		C	Resistor (1/10W 5.6KΩ ±5%) [R074]		
109	VRS-TS2AD563J		AA		C	Resistor (1/10W 56KΩ ±5%) [R061]		
110	VRS-TS2AD623F		AA		C	Resistor (1/10W 62KΩ ±1%) [R030]		
111	VRS-TS2AD822F		AA		C	Resistor (1/10W 8.2KΩ ±1%) [R062]		
112	VRS-TS2AD822J		AA		C	Resistor (1/10W 8.2KΩ ±5%) [R096,097]		
113	VRS-TS2AD823F		AA		C	Resistor (1/10W 82KΩ ±1%) [R032]		
114	VRS-TS2AD911J		AA		C	Resistor (1/10W 910Ω ±5%) [R027]		
115	VRS-TS2AD913F		AA		C	Resistor (1/10W 91KΩ ±1%) [R053]		
116	VSDTA143EK/-1		AB		B	Transistor (DTA143EK) [Q010~014,016]		
117	VSDTC114EK/-1		AB		B	Transistor (DTC114EK) [Q001~008]		
118	VSDTC144GKA-1		AC		B	Transistor (DTC144GKA) [Q017]		
119	VS2SD1383KB-1		AC		B	Transistor (2SD1383KB) [Q009]		
120	VCEAGU1HM476M		AC		C	Capacitor (50WV 47μF) [C172]		
121	VHERD3.3EB/-1		AE		B	Zener diode (RD3.3EB) [ZD007]		
122	VHiUPC7824AHF		AG		B	IC (UPC7824AHF) [IC052]		
123	XBPSD30P08K00		AA		C	Screw (3×8K) [for IC016,017,052]		
	(Unit)							
901	CPWBN1240FC51		CD	N	E	Main PWB		

50 Operation PWB 1

NO.	PARTS CODE	COMPATIBLE	PRICE RANK	NEW MARK	PART RANK	DESCRIPTION	TR NO.	VALID
1	DHAi−2499FCZZ		AF		C	OP earth harness		
2	QCNCM0887FCZZ		AE		C	Connector (52270-1017) [CN450]		
3	QCNCM0888FCZZ		AG		C	Connector (52270-1717) [CN451]		
4	QSW−P0460FCZZ		AC		B	Push switch (SKHVPD)		
5	QSW−P0467FCZZ		AF		B	Push switch (SKQEAB)		
6	RCRS−0007FCZZ		AD		B	Crystal (CSB480EB) [X450]		
7	RMPTC4102QCJB		AB		C	Block resistor (1.0KΩ×4 1/8W ±5%) [BR450]		
8	VCEAGU1AW476M		AA		C	Capacitor (10WV 47μF) [C450]		
9	VCKYTV1HB101K		AA		C	Capacitor (50WV 100pF) [C451,452,453,454,456,457]		
10	VCKYTV1HB223K		AA		C	Capacitor (50WV 0.022μF) [C455,457]		
11	VHiLR3717M/−1		AH		C	IC (LR3717M) [IC451]		
12	VHiM66313FP−1		AN		C	IC (M66313FP) [IC450]		
13	VHPLB603MF/−1		AQ		B	LED (LB603MF)		
14	VHPLD603MG/−1		AE		B	Photo transistor (LD603MG)		
15	VHPSLR322MC3F		AC		B	LED (SLR322MC3F)		
16	VRS−TP2BD000J		AA		C	Resistor (1/8W 0Ω ±5%)		
17	VRS−TP2BD101J		AA		C	Resistor (1/8W 100Ω ±5%) [R450,458,470,475]		
18	VRS−TP2BD102J		AA		C	Resistor (1/8W 1.0KΩ ±5%) [R461,463,465]		
19	VRS−TP2BD121J		AA		C	Resistor (1/8W 120Ω ±5%) [R452,453,459,460,467,469]		
20	VRS−TP2BD152J		AA		C	Resistor (1/8W 1.5KΩ ±5%) [R454,455,456,457]		
21	VRS−TP2BD200J		AA		C	Resistor (1/8W 20Ω ±5%) [R451]		
22	VRS−TP2BD331J		AB		C	Resistor (1/8W 330Ω ±5%) [R462,464,466]		
23	VSDTC123YK/−1		AB		B	Transistor (DTC123YK) [Q453]		
24	VS2SB1295−/−1		AB		B	Transistor (2SB1295) [Q450,451,452]		
	(Unit)							
901	CPWBF1101FC51		BN		E	Operation PWB 1		

51 Operation PWB 2

NO.	PARTS CODE	COMPATIBLE	PRICE RANK	NEW MARK	PART RANK	DESCRIPTION	TR NO.	VALID
1	QSW-P0460FCZZ		AC		B	Push switch (SKHVPD)		
2	QCNCM0888FCZZ		AG		C	Connector (52270-1717)		
3	QCNCW0889FCZZ		AG		C	Connector (DF3-13P-2V)		
4	VHPSLR322MC3F		AC		B	LED(Green) (SLR322MC3F)		
	(Unit)							
901	CPWBF1102FC52		BF		E	Operation PWB 2		

52 Operation PWB 3

NO.	PARTS CODE	COMPATIBLE	PRICE RANK	NEW MARK	PART RANK	DESCRIPTION	TR NO.	VALID
1	DHAi−2426FCZZ		AF		C	LCD VR harness		
2	QSW−P0465FCZZ		AC		B	Tact switch (SKHVPB)		
3	RVR−B3350QCZZ		AK		B	Variable resistor		
4	QCNCW0889FCZZ		AG		C	Connector (DF3-13P-2V)		
5	VHPSLR322MC3F		AC		B	LED(Green) (SLR322MC3F)		
	(Unit)							
901	CPWBF1103FC51		BA		E	Operation PWB 3		

53 Operation control PWB

NO.	PARTS CODE	COMPATIBLE	PRICE RANK	NEW MARK	PART RANK	DESCRIPTION	TR NO.	VALID
1	DHAi-2499FCZZ		AF		C	OP earth harness [FG]		
2	QCNCM0824FCZZ		AD		C	Connector (12pin) [CN402]		
3	QCNCM0830FCZZ		AG		C	Connector (30pin) [CN401]		
4	QCNCM0846FCZZ		AF		C	Connector (52103-1217) [CN405]		
5	QCNCM0887FCZZ		AE		C	Connector (52270-1017) [CN404]		
6	QCNCW0398FCZZ		AB		C	Connector (3pin) [CN403]		
7	QCNCW0758FCZZ		AC		C	Connector (2pin) [CN406]		
8	QSOCZ2051SC32		AC		C	IC socket (32pin) [for IC411,414]		
9	QSOCZ6428ACZZ		AE		C	IC socket (28pin) [flR IC410]		
10	RCRS-0018FCZZ		AE		B	Crystal (CSA4.0MG011) [X402]		
11	RCRS-0019FCZZ		AF		B	Crystal (CST9.83MTW) [X401]		
12	RMPTM0033FCZZ		AC	N	C	Block resistor (4.7KΩ×8) [BR522]		
13	RMPTM0034FCZZ		AC	N	C	Block resistor (10KΩ×8) [BR501~521,523~525]		
14	RVR-M5314QCZZ		AD		B	Variable resistor (5KΩ) [VR401]		
15	VCCCTV1HH221J		AA		C	Capacitor (50WV 220pF) [C524~530]		
16	VCEAGU1AW476M		AA		C	Capacitor (10WV 47μF) [C403,411,413]		
17	VCEAGU1AW477M		AC		C	Capacitor (10WV 470μF) [C408]		
18	VCEAGU1CW107M		AB		C	Capacitor (16WV 100μF) [C412]		
19	VCEAGU1CW477M		AC		C	Capacitor (16WV 470μF) [C409]		
20	VCEAGU1EW106M		AA		C	Capacitor (25WV 10μF) [C407]		
21	VCEAGU1EW475M		AA		C	Capacitor (25WV 4.7μF) [C414]		
22	VCEAGU1HW334M		AA		C	Capacitor (50WV 0.33μF) [C404,405]		
23	VCEAGU1VW107M		AB		C	Capacitor (35WV 100μF) [C410]		
24	VCEAGU1VW476M		AB		C	Capacitor (35WV 47μF) [C402]		
25	VCEAGU1VW477M		AD		C	Capacitor (35WV 470μF) [C406]		
26	VCKYTV1HB102K		AA		C	Capacitor (50WV 1000pF) [C511,522,523,551,552,554,555]		
27	VCKYTV1HB222K		AA		C	Capacitor (50WV 2200pF) [C553]		
28	VCKYTV1HB223K		AA		C	Capacitor (50WV 0.022μF) [C501~510,512~521,531~539]		
	VCKYTV1HB223K		AA		C	Capacitor (50WV 0.022μF) [C542~548,550,556~560]		
29	VCKYTV1HB681K		AA		C	Capacitor (50WV 680pF) [C540,541]		
30	VCQYNU1HM103K		AA		C	Capacitor (50WV 0.010μF) [C401]		
31	VHDDAN217//-1		AC		B	Diode (DAN217) [D501,502]		
32	VHDDAP202K/-1		AB		B	Diode (DAP202K) [D503]		
33	VHDDSM1D1//-U		AB		B	Diode (DSM1D1) [D401,402]		
34	VHDDSS133//-1		AA		B	Diode (DSS133) [D403,405]		
35	VHH103AT-2/-1		AG		B	Thermistor (103AT-2) [TH401]		
36	VHiHD64646F-1		AV		B	IC (HD64646F) [IC429]		
37	VHiLC3564SM10		AS		B	IC (LC3564SM10) [IC502,505,506]		
	VHiLC3564BM-1	1	AS		B	IC	SP2293	98/04/01
38	VHiLH531GP5-1		AR		B	IC (LH531GP5) [IC501]		
39	VHiLM339NS/-1		AD		B	IC (LM339NS) [IC402]		
40	VHiNJM78L05A1		AD		B	IC (NJM78L05A) [IC427]		
41	VHiSN74HC244S		AF		B	IC (SN74HC244S) [IC420]		
42	VHiSN74LS02NS		AF		B	IC (SN74LS02NS) [IC509]		
43	VHiSN74LS04NS		AF		B	IC (SN74LS04NS) [IC421]		
44	VHiSN74LS08NS		AF		B	IC (SN74LS08NS) [IC503]		
45	VHiSN74LS138N		AG		B	IC (SN74LS138N) [IC405]		
46	VHiSN74LS244N		AS		B	IC (SN74LS244N) [IC404,406,412,416,418,419,425,426]		
47	VHiSN74LS273N		AQ		B	IC (SN74LS273N) [IC407,408,413,417,423,428]		
48	VHiSN74LS32NS		AF		B	IC (SN74LS32NS) [IC504,508]		
49	VHiSN74LS373N		AL		B	IC (SN74LS373N) [IC424]		
50	VHiSN74LS74NS		AD		B	IC (SN74LS74NS) [IC507,510]		
51	VHiTD62504F-1		AF		B	IC (TD62504F) [IC401,415,422]		
52	VHiUPA2003GR/		AF		B	IC (UPA2003GR) [IC409]		
53	VHiUPD78217-1		BA		B	IC (UPD78217) [IC403]		
54	VHi27C010B9FC		AY	N	B	Data ROM(Japanese) (27C010B9FC) [IC411]		
	VHi27C010C1FC		AY	N	B	Data ROM(English) (27C010C1FC) [IC411]		
	VHi27C010C2FC		AY	N	B	Data ROM(German) (27C010C2FC) [IC411]		
	VHi27C010C3FC		AY	N	B	Data ROM(Spanish) (27C010C3FC) [IC411]		
	VHi27C010C4FC		AY	N	B	Data ROM(French) (27C010C4FC) [IC411]		
55	VHi27C04018FC		BC	N	B	ROM (27C04018FC) [IC414]		
56	VHi27C512E1FC		AX	N	B	Program ROM (27C512E1FC) [IC410]		
57	VRD-RC2EY161J		AA		C	Resistor (1/4W 160Ω ±5%) [R406]		
58	VRD-RC2EY201J		AA		C	Resistor (1/4W 200Ω ±5%) [R402]		
59	VRD-RC2EY472J		AA		C	Resistor (1/4W 4.7KΩ ±5%) [R403]		
60	VRD-RC2EY560J		AA		C	Resistor (1/4W 56Ω ±5%) [R401]		
61	VRS-HT3AA911J		AA		C	Resistor (1W 910Ω ±5%) [R404,405]		
62	VRS-TS2AD103J		AA		C	Resistor (1/10W 10KΩ ±5%) [R501~505,509~511,514,515]		
	VRS-TS2AD103J		AA		C	Resistor (1/10W 10KΩ ±5%) [R521,522,534~537,545,546]		
	VRS-TS2AD103J		AA		C	Resistor (1/10W 10KΩ ±5%) [R551,552,554,555,561]		
63	VRS-TS2AD151J		AA		C	Resistor (1/10W 150Ω ±5%) [R516,519]		
64	VRS-TS2AD152J		AA		C	Resistor (1/10W 1.5KΩ ±5%) [R562]		
65	VRS-TS2AD203J		AA		C	Resistor (1/10W 20KΩ ±5%) [R539,541]		
66	VRS-TS2AD242J		AA		C	Resistor (1/10W 2.4KΩ ±5%) [R556]		

53 Operation control PWB

NO.	PARTS CODE	COMPATIBLE	PRICE RANK	NEW MARK	PART RANK	DESCRIPTION	TR NO.	VALID
67	VRS−TS2AD243J		AA		C	Resistor (1/10W 24KΩ ±5%) [R557]		
68	VRS−TS2AD272J		AA		C	Resistor (1/10W 2.7KΩ ±5%) [R540,542,543,544]		
69	VRS−TS2AD331J		AA		C	Resistor (1/10W 330Ω ±5%) [R538]		
70	VRS−TS2AD472J		AA		C	Resistor (1/10W 4.7KΩ ±5%) [R506~508,518,523,547,550,553]		
71	VRS−TS2AD624J		AA		C	Resistor (1/10W 620KΩ ±5%) [R512,513]		
72	VRS−TS2AD752J		AA		C	Resistor (1/10W 7.5KΩ ±5%) [R520]		
73	VSDTA144GK／−1		AB		B	Transistor (DTA144GK) [Q503]		
74	VS2SA1585S／−1		AC		B	Transistor (2SA1585S) [Q403]		
75	VS2SB1295−／−1		AB		B	Transistor (2SB1295) [Q504]		
76	VS2SD1625−／−1		AA		B	Transistor (2SD1625) [Q501,502]		
77	VS2SD592A／／−1		AE		B	Transistor (2SD592A) [Q401,402]		
	(Unit)							
901	CPWBN1241FC51		CA	N	E	Operation control PWB (Japanese)		
	CPWBN1241FC52		CA	N	E	Operation control PWB (English)		
	CPWBN1241FC53		CA	N	E	Operation control PWB (German)		
	CPWBN1241FC54		CA	N	E	Operation control PWB (Spanish)		
	CPWBN1241FC55		CA	N	E	Operation control PWB (French)		

54 Inverter PWB

NO.	PARTS CODE	COMPATIBLE	PRICE RANK	NEW MARK	PART RANK	DESCRIPTION	TR NO.	VALID
1	QCNCW0399FCZZ		AB		C	Connector (4pin) [CN2]		
2	QCNCW0759FCZZ		AC		C	Connector (3pin) [CN1]		
3	RC-QZ0358FCZZ		AF		C	Capacitor (630WV 0.012μF) [C1]		
4	RC-QZ0359FCZZ		AD		C	Capacitor (3.15KV 18pF) [C2]		
5	RCiLF0068FCZZ		AF		C	Coil [L1]		
6	RTRNZ0511FCZZ		AQ		B	Transformer [T1]		
7	VRD-RC2EY103J		AA		C	Resistor (1/4W 10KΩ ±5%) [R1,2]		
8	VS2SC3332-/-1		AE		B	Transistor (2SC3332) [Q1,2]		
	(Unit)							
901	CPWBF1107FC51		BC		E	Inverter PWB		

55 AC Circuit PWB

NO.	PARTS CODE	COMPATIBLE	PRICE RANK	NEW MARK	PART RANK	DESCRIPTION	TR NO.	VALID
1	DHAi-2179FCZZ		AK		C	Triac harness [T1(WH),T2(BL),G(BR)]		
2	DHAi-2427FCZZ		AG		C	DCPS harness (Japan,100V series) [L(BK),N(WH)]		
	DHAi-2802FC12		AP	N	C	DCPS harness (200V series) [IN(BK),IN(WH),IN(WH-RD)]		
3	DHAi-2486FCZZ		AE		C	Earth harness [FG]		
4	PRDAF0047FCZZ		AC		C	Heat sink (SP425C) [For TD301]		
5	PRDAF0062FCZZ		AE		C	Heat sink A (Japan,200V series) [TD302]		
6	QCNCM0672FCZZ		AB		C	Connector (2pin)(Japan,100V series) [CN302,304]		
	QCNCM0672FCZZ		AB		C	Connector (2pin)(200V series) [CN302]		
7	QCNCM0960FCZZ		AD	N	C	Connector (BHP-VH-R)(Japan only) [CN306]		
8	QCNCM0894FCZZ		AD		C	Connector (2pin) [CN303]		
9	QCNCM0895FCZZ		AG		C	Connector (3pin) [CN305]		
10	QCNCW0447FCZZ		AB		C	Connector (7pin) [CN301]		
11	QFS-A2700QCZZ		AD		A	Fuse (20A 125V)(Japan only) [F301,302]		
	QFS-B3700QCZZ		AG		A	Fuse (20A 250V)(Export･･ 100V series) [F301]		
	QFS-C1500QCZZ		AF		A	Fuse (10A 240V)(200V series) [F301]		
12	QFS-B2330QCZZ		AD		A	Fuse (3.15A/125V)(Japan only) [F303]		
13	QFSHA1002CCZZ		AB		C	Fuse holder (Japan only) [For F303]		
14	QFSHD0026FCZZ		AC		C	Fuse holder (Japan only) [For F301,302]		
	QFSHD0026FCZZ		AC		C	Fuse holder (Export) [For F301]		
15	QTANP0193FCZZ		AC		C	Tab terminal [PLUG,IN/OUT,ACL/N,IN,HL,L]		
	QTANP0209FCZZ	3	AC		C	TAB TERMINAL	SP2301	98/06/01
16	RC-QZ0314FCZZ		AH		C	Capacitor (XYE224472) [C302]		
17	RC-QZ0357FCZZ		AG		C	Capacitor (0.47μF)(200V series) [C303]		
18	RCiLF0027FCZZ		AQ		C	Coil (1mH 10A)(200V series) [L301]		
19	RCiLF0048FCZZ		AG		C	Coil (100μH 3A)(Japan,100V series) [L304]		
	RCiLF0043FCZ1		AL		C	Chork coil (7mH 1.5A)(200V series) [L304]		
20	RCiLF0069FCZZ		AV		C	Coil (80μH 10A)(200V series) [L302,303]		
21	RH-DZ0019FCZZ		AG		B	Diode (DSA-242MA)(Japan,100V series) [A301]		
22	RMPTA0031FCZZ		AE		B	CR mix part (ECQ-JX)(Japan,200V series) [CR301,302,303]		
	RMPTA0031FCZZ		AE		B	CR mix part (ECQ-JX)(100V series) [CR301,302]		
23	RR-WZ0328FCZZ		AD		C	Resistor (5W 3Ω)(Japan,100V series) [R301]		
24	RR-XZ0337FCZZ		AC		B	Fuse resistor (1W 220Ω)(Japan,100V series) [FR301]		
	RR-XZ0338FCZZ		AC		B	Fuse resistor (1W 820Ω)(200V series) [FR301]		
25	RRLYD4220QCZZ		AP		B	Relay (G2R-1)(Japan,100V series) [RY302]		
26	RRLYD6121QCZZ		AM		B	Relay (G4W-1112PUS)(Japan,100V series) [RY301]		
	RRLYD6120QCZZ		AP		B	Relay (G4W-1112PVD)(200V series) [RY301]		
27	VCEAGU1VW107M		AB		C	Capacitor (35WV 100μF) [C307]		
29	VCFYPU1HA474J		AE		C	Capacitor (50WV 0.47μF) [R305,306]		
30	VCFYFU2ED474M		AG		C	Capacitor (25WV 0.47μF)(Except Japan) [C301]		
31	VCQYNU1HM104K		AB		C	Capacitor (50WV 0.10μF)(Japan,200V series) [C308,309,310,311]		
	VCQYNU1HM104K		AB		C	Capacitor (50WV 0.10μF)(100V series) [C308,309,310]		
32	VCQYNU1HM223K		AA		C	Capacitor (50WV 0.022μF)(Japan,100V series) [C304]		
	VCQYNU1HM473K		AB		C	Capacitor (50WV 0.047μF)(200V series) [C304]		
33	VHDDSS133//-1		AA		B	Diode (DSS133)(Japan,100V series) [D301,302]		
	VHDDSS133//-1		AA		B	Diode (DSS133)(200V series) [D301]		
34	VHDRM10Z///-1		AC		B	Diode (RM10Z)(Japan only) [D303]		
35	VHDS1WBA60S-1		AD		B	Diode (S1WBA60S) [RE301]		
36	VHiSHN002//-1		AU		B	IC (SHN002) [HIC]		
37	VHRS11MD5V/-1		AF		B	Photo thyristor (S11MD5V)(Japan,100V series) [SSR301]		
	VHRS21MD3VY-1		AG		B	Photo thyristor (S21MD3VY)(200V series) [SSR301]		
38	VHRS21ME4F/-1		AH		B	Photo triac (S21ME4F)(Japan only) [SSR302,303]		
	VHRS21ME4F/-1		AH		B	Photo triac (S21ME4F)(100V series) [SSR302]		
	VHRS21ME4FY-1		AK		B	Photo thyristor (S21ME4FY)(200V series) [SSR302]		
39	VHSTM1241S-L/		AK		B	Thyristor (TM1241S-L)(Japan,100V series) [TD301]		
	VHSTM861S-L-1		AH		B	Thyristor (TM861S)(200V series) [TD301,302]		
40	VHSTM1641S-L1		AH		B	Thyristor (TM1641S)(Japan only) [TD302]		
41	VRD-HT2HY105J		AA		C	Resistor (1/2W 1.0MΩ ±5%)(Japan,100V series) [R302]		
	VRD-HT2HY474J		AA		C	Resistor (1/2W 470KΩ ±5%)(200V series) [R302]		
42	VRNHT2HK2003F		AC		C	Resistor (1/2W 200KΩ ±1%)(Japan,100V series) [R303,304]		
	VRNHT2HK4123F		AC		C	Resistor (1/2W 412KΩ ±1%)(200V series) [R303,304]		
43	VRS-HT2HA101J		AA		C	Resistor (1/2W 100Ω ±5%)(Japan,200V series) [R307,309,312]		
	VRS-HT2HA101J		AA		C	Resistor (1/2W 100Ω ±5%)(100V series) [R307,309]		
44	VRS-HT2HA121J		AA		C	Resistor (1/2W 120Ω ±5%)(Japan only) [R308,310,311]		
	VRS-HT2HA121J		AA		C	Resistor (1/2W 120Ω ±5%)(Export 100V series) [R308,310]		
	VRS-HT2HA201J		AA		C	Resistor (1/2W 200Ω ±5%)(200V series) [R308,310,311]		
45	VRS-RE3LA103J		AB		C	Resistor (3W 10KΩ ±5%)(Japan,100V series) [R305]		
46	VRS-RE3LA433J		AC		C	Resistor (3.0W 43KΩ ±5%)(200V series) [R305,306]		

55 AC Circuit PWB

NO.	PARTS CODE	COMPATIBLE	PRICE RANK	NEW MARK	PART RANK	DESCRIPTION	TR NO.	VALID
47	XBPSD30P08K00		AA		C	Screw (3×8K)(Japan,200V series) [For TD301,302]		
	XBPSD30P08K00		AA		C	Screw (3×8K)(100V series) [For TD301]		
48	DHAi−2806FC11		AQ	N	C	DHR harness (200V series) [IN(BK),IN(WH)]		
	(Unit)							
901	CPWBF1250FC51		BP	N	E	AC circuit PWB (Japan only)		
	CPWBF1254FC51		BN	N	E	AC circuit PWB (100V series)		
	CPWBF1251FC51		BS	N	E	AC circuit PWB (200V series)		

56 DC Power supply PWB

NO.	PARTS CODE	COMPATIBLE	PRICE RANK	NEW MARK	PART RANK	DESCRIPTION	TR NO.	VALID
1	0FT33042108//		AY		C	Chassis (APA24200-046) [1]		
2	0FT33042086//		AL		C	Insulation sheet (APG47100-192)(Japan, 100V series) [4]		
	0FT33022239//		AP		C	Insulation sheet (APG47100-178)(200V series) [4]		
3	0FT33042094//		AH		C	Insulation sheet (APG47100-208)(Japan, 100V series) [5]		
	0FT33017197//		AP		C	Insulation sheet (APG47100-191)(200V series) [5]		
4	0FT23523187//		AD		C	Heating sheet (AP47100-340-056) [7]		
5	0FT23339483//		AC		C	Angle (AP47101-004-01) [10]		
6	0FT23202569//		AC		C	Spacer (AP47030-169) [11]		
7	0FT23204677//		AC		C	Spacer (AP47030-171)(Japan, 100V series) [12]		
8	0FT23370860//		AB		C	Spacer (AP47120-002) [13]		
9	0FT23395995//		AB		C	Spacer (AP47120-003) [14]		
10	0FT23455734//		AC		C	Screw (3×18) [16]		
11	0FT23432963//		AC		C	Screw (3×10) [19]		
12	0FT23202577//		AC		C	Spacer (AP47030-168) [26]		
13	0FT23339750//		AC		C	Angle (AP47101-008-05) [27]		
⚠ 14	0FT33036310//		AN		A	Fuse (AC125V 10A)(Japan,100V series) [F701]		
⚠	0FT23780341//		AK		A	Ceramic fuse (50CT 063H)(200V series) [F701]		
⚠ 15	0FT33035918//		AK		A	Fuse (AC125V 5A)(Japan,100V series) [F702]		
⚠	0FT23108481//		AN		A	Fuse (ES3-5000 AC250V 5A)(200V series) [F702]		
⚠ 16	0FT23676927//		AK		A	Fuse (AC125V 3.15A)(Japan,100V series) [F704,707]		
⚠	0FT23106594//		AK		A	Fuse (ES3-3150 AC250V 3.15A)(200V series) [F704,707]		
⚠ 17	0FT23737527//		AK		A	Fuse (AC125V 6.3A)(Japan,100V series) [F705]		
⚠	0FT23189708//		AK		A	Fuse (ES3-6300 AC250V 6.3A)(200V series) [F705]		
⚠ 18	0FT23779564//		AK		A	Fuse (AC125V 1.25A)(Japan,100V series) [F708]		
⚠	0FT23219844//		AK		A	Fuse (ES3-1250 AC250V 1.25A)(200V series) [F708]		
⚠ 19	0FT23779556//		AP		A	Fuse (AC125V 0.16A)(Japan,100V series) [F709]		
⚠	0FT23779521//		AP		A	Fuse (218.160 AC250V 0.16A)(200V series) [F709]		
20	0FT23555402//		AD		C	Fuse holder (EYF-52LCZ AC250V 10A) [F701,702,704,705,707,708]		
21	0FT23555402//		AD		C	Fuse holder (EYF-52LCZ AC250V 10A) [F709]		
22	0FT33035438//		BA		B	Transformer (EXT42920-363)(Japan,100V series) [T701]		
	0FT33019416//		BA		B	Transformer (EXT42940-350)(200V series) [T701]		
23	0FT33007612//		BA		B	Transformer (EXT41400-077) [T702]		
24	0FT23606015//		AR		C	Reactor (FK-080G-2020)(Japan,100V series) [L703]		
	0FT23660168//		AU		C	Reactor (FK-080G-5020)(200V series) [L703,704]		
25	0FT33008112//		AR		C	Reactor (EXL40880-014)(200V series) [L706]		
26	0FT33016190//		AR		C	Reactor (EXL42950-124) [L707]		
27	0FT23642909//		AK		C	Reactor (CX40357-004) [L709]		
28	0FT23642925//		AK		C	Reactor (CX40357-006) [L710,711,712]		
29	0FT23606732//		AD		B	Diode (S5688G)(Japan,100V series) [D701,702,716,736,741,742]		
	0FT23586928//		AD		B	Diode (S5688J)(200V series) [D701,702]		
	0FT23606732//		AD		B	Diode (S5688G)(200V series) [D716,736]		
	0FT23586928//		AD		B	Diode (S5688J)(200V series) [D741,742]		
30	0FT23195236//		AC		B	Diode (1SS119-14)(Japan,100V series) [D705,712,717,719]		
	0FT23195236//		AC		B	Diode (1SS119-14)(200V series) [D705,712,717,719,721,725,727]		
31	0FT33035365//		AH		B	Diode (RG2A)(Japan,100V series) [D706]		
	0FT33035373//		AH		B	Diode (RG1C)(200V series) [D706]		
32	0FT33035357//		AH		B	Diode (R2M)(Japan,100V series) [D707]		
	0FT33035357//		AH		B	Diode (R2M)(200V series) [D707,708]		
33	0FT23322440//		AH		B	Diode (AK03)(Japan,100V series) [D710,711]		
	0FT23322440//		AH		B	Diode (AK03)(200V series) [D710,711,743]		
34	0FT23195236//		AC		B	Diode (1SS119-14)(200V series) [D729,735]		
35	0FT23601552//		AF		B	Diode (1GU42)(Japan,100V series) [D714,718,737]		
	0FT23601552//		AF		B	Diode (1GU42)(200V series) [D714,737]		
36	0FT33035349//		AK		B	Diode (RL2Z) [D740]		
37	0FT23690091//		AE		B	Zener diode (RD6.2ES-B1) [D703,724,738,745]		
38	0FT23310639//		AE		B	Zener diode (RD20ES-B2)(Japan,100V series) [D709,730,731]		
	0FT23310639//		AE		B	Zener diode (RD20ES-B2)(200V series) [D709,730,731,744]		
39	0FT23274160//		AE		B	Zener diode (RD39E-B3:B4) [D713]		
40	0FT23348393//		AE		B	Zener diode (RD15ES-B1) [D715,734]		
41	0FT23288153//		AE		B	Zener diode (RD27ES-B2) [D720]		
42	0FT23265420//		AE		B	Zener diode (RD24ES-B2) [D722,723,739]		
43	0FT23291235//		AE		B	Zener diode (RD12ES-B3) [D726]		
44	0FT23606910//		AE		B	Zener diode (RD4.7ES-B2) [D728]		
45	0FT23246183//		AF		B	Zener diode (RD8.2ES-B3) [D732]		
46	0FT23473996//		AR		B	Rectifier (FML-G16S)(200V series) [D704]		
47	0FT23665984//		AU		B	Rectifier (D15XB60)(Japan,100V series) [RC701]		
	0FT33027222//		AU		B	Rectifier (D6SB80)(200V series) [RC701]		
48	0FT23376133//		AR		B	Rectifier (D5SBA60-4000)(Japan,100V series) [RC702]		
49	0FT23518795//		AN		B	Rectifier (FMM-22S)(Japan,100V series) [RC703]		
50	0FT23413403//		AU		B	Rectifier (ESAD92M-03) [RC704]		

56 DC Power supply PWB

NO.	PARTS CODE	COMPATIBLE	PRICE RANK	NEW MARK	PART RANK	DESCRIPTION	TR NO.	VALID
51	0FT23299783//		AS		B	Rectifier (FML-34S) [RC706]		
52	0FT23637638//		AN		B	Rectifier (D5LC20U) [RC707]		
53	0FT23700801//		AL		B	Rectifier (D5SC4M) [RC708]		
54	0FT33021240//		AN		B	Thyristor (TF861S)(Japan,100V series) [CR701]		
55	0FT23078361//		AH		B	Transistor (2SA1020)(Japan,100V series) [Q704]		
	0FT23078361//		AH		B	Transistor (2SA1020)(200V series) [Q704,705]		
56	0FT23405087//		AN		B	Transistor (2SC3852A) [Q706]		
57	0FT23308065//		AN		B	Transistor (2SC4073) [Q707]		
58	0FT23080986//		AG		B	Transistor (2SC1815) [Q708,709]		
59	0FT23127168//		AG		B	Transistor (2SA1015) [Q711]		
60	0FT23149366//		AH		B	Transistor (2SC2655-Y) [Q712]		
61	0FT23707822//		BD		B	FET (2SK2057)(Japan,100V series) [Q702,703]		
	0FT23554120//		AZ		B	FET (2SK1358)(200V series) [Q702,703]		
62	0FT23440869//		AX		B	FET (2SK1346) [Q710]		
63	0FT23554147//		AY		B	FET (2SK1531)(200V series) [Q714,715]		
64	0FT23660427//		AH		B	Photo coupler (PS2561-1)(Japan,100V series) [PC701,702,703]		
	0FT23652335//		AH		B	Photo coupler (PS2652-V)(200V series) [PC701,702,703]		
65	0FT23639789//		AS		B	IC (FA5310P) [Z701]		
66	0FT23364755//		AK		B	IC (HA17431PA) [Z702]		
67	0FT23780147//		AL		B	IC (NJM78M20FA) [Z703]		
68	0FT23463133//		AD		C	Chemical capacitor (KMF50VB-2R2FC) [CX708]		
69	0FT23650251//		BD		C	Chemical capacitor (KMH200VNSN-1500-35E)(Japan,100V series) [C707,708,709,710]		
	0FT23611957//		BD		C	Chemical capacitor (KLH400VNSN390M30F DIA30X50L)(200V series) [C707,709]		
70	0FT23623378//		AG		C	Chemical capacitor (KMF50VB-220P6)(Japan,100V series) [C722]		
	0FT23463192//		AF		C	Chemical capacitor (KMF63VB-47FC)(200V series) [C722]		
71	0FT23463060//		AF		C	Chemical capacitor (KMF35VB-100FC)(Japan,100V series) [C723,727]		
	0FT23463060//		AF		C	Chemical capacitor (KMF35VB-100FC)(200V series) [C723]		
72	0FT23463109//		AL		C	Chemical capacitor (KMF35VB-2200) [C732,739,741,742]		
73	0FT23463095//		AK		C	Chemical capacitor (KMF35VB-1000) [C743,746,748,749]		
74	0FT23463079//		AG		C	Chemical capacitor (KMF35VB-220) [C747]		
75	0FT23463028//		AE		C	Chemical capacitor (KMF25VB-470) [C750]		
76	0FT23544966//		AF		C	Chemical capacitor (KMF50VB-100) [C751]		
77	0FT23463176//		AE		C	Chemical capacitor (KMF50VB-22FC) [C752]		
78	0FT23087743//		AD		C	Film capacitor (50V 0.0047μF) [CX701]		
79	0FT23090523//		AD		C	Film capacitor (50V 0.047μF) [CX702]		
80	0FT23382079//		AG		C	Film capacitor (MMT-224J50) [CX703,725]		
81	0FT23090531//		AD		C	Film capacitor (AMZF-104K50) [CX704,706,709]		
82	0FT23090280//		AD		C	Film capacitor (AMZF-103K50)(Japan,100V series) [CX705,C705,726]		
	0FT23090280//		AD		C	Film capacitor (AMZF-103K50)(200V series) [CX705,726]		
83	0FT23095525//		AD		C	Film capacitor (AMZF-102K50) [CX707]		
84	0FT33044313//		AR		C	Film capacitor (MMR275VACM105) [C701]		
85	0FT23735699//		AH		C	Film capacitor (MMR275VACM224)(Japan,100V series) [C704]		
	0FT23735710//		AK		C	Film capacitor (MMR275VACM474)(200V series) [C704]		
86	0FT23611345//		AK		C	Film capacitor (MMC-474K400)(Japan,100V series) [C715,716,717]		
	0FT23713105//		AK		C	Film capacitor (MMC-474K630)(200V series) [C716,717]		
87	0FT23611310//		AG		C	Film capacitor (MMC-473K400)(Japan,100V series) [C721]		
	0FT23633012//		AH		C	Film capacitor (MMC-473K630)(200V series) [C721]		
88	0FT23334325//		AD		C	Film capacitor (AMZF-471K50) [C724]		
89	0FT23611221//		AG		C	Film capacitor (MMC-104K250) [C744]		
90	0FT23529932//		AE		C	Ceramic capacitor (DE7100-726F222MVA1-KC)(Japan,100V series) [C702,703,712]		
	0FT23069737//		AE		C	Ceramic capacitor (DE7100-F222MVA1-KC)(200V series) [C702,703]		
91	0FT23529932//		AE		C	Ceramic capacitor (DE7100-726F222MVA1-KC)(200V series) [C714]		
92	0FT23515109//		AE		C	Ceramic capacitor (DE0705-742R471K1K)(Japan,100V series) [C718,719,730,731]		
	0FT23515109//		AE		C	Ceramic capacitor (DE0705-742R471K1K)(Japan,100V series) [C737,738,745]		
	0FT23515141//		AE		C	Ceramic capacitor (DE0705-742R221K2K)(200V series) [C718,719]		
	0FT23515109//		AE		C	Ceramic capacitor (DE0705-742R471K1K)(200V series) [C728,729,730,731]		
	0FT23515109//		AE		C	Ceramic capacitor (DE0705-742R471K1K)(200V series) [C735,736,737,738]		

56 DC Power supply PWB

NO.	PARTS CODE	COMPATIBLE	PRICE RANK	NEW MARK	PART RANK	DESCRIPTION	TR NO.	VALID
92	0FT23515109//		AE		C	Ceramic capacitor (DE0705-742R471K1K)(200V series) [C745,754,755]		
93	0FT23010279//		AE		C	Ceramic capacitor (DD104SL-470J50V) [C733]		
94	0FT23644626//		AG		C	Variable resistor (EVM-4LGA00B52) [RV701]		
95	0FT23644642//		AG		C	Variable resistor (EVM-4LGA00B23) [RV702]		
96	0FT23261611//		AN		C	Cement resistor (MEG05N220JU130 5W 22ΩJ)(Japan,100V series) [R702,703]		
97	0FT23563464//		AC		C	Metal film resistor (RSMF2SL 15KΩJ)(Japan,100V series) [R706,707]		
	0FT23563480//		AC		C	Metal film resistor (RSMF2SL 33KΩJ)(200V series) [R706,707]		
98	0FT23640795//		AD		C	Metal film resistor (ERG2SJW101D) [R714,715]		
99	0FT23562441//		AD		C	Metal film resistor (RSMF12SL 15ΩJ)(Japan,100V series) [R717,718]		
	0FT23562441//		AD		C	Metal film resistor (RSMF12SL 15ΩJ)(200V series) [R710,711,717,718]		
100	0FT23562468//		AC		C	Metal film resistor (RSMF12SL 22ΩJ) [R721,752]		
101	0FT33007396//		AD		C	Metal film resistor (RSMF2B 0.1ΩJ)(Japan,100V series) [R722,723,724,725]		
	0FT23537773//		AC		C	Metal film resistor (RSMF2B 0.22ΩJ)(200V series) [R722,723,724,725]		
102	0FT23562530//		AC		C	Metal film resistor (RSMF12SL 220ΩJ) [R726]		
103	0FT23527069//		AD		C	Metal film resistor (ERG2SJW683D)(Japan,100V series) [R732]		
	0FT23527069//		AD		C	Metal film resistor (ERG2SJW683D)(200V series) [R732,733]		
104	0FT23563251//		AC		C	Metal film resistor (RSMF2SL 10ΩJ) [R735,765]		
105	0FT23563243//		AD		C	Metal film resistor (RSMF2SL 6.8ΩJ)(Japan,100V series) [R736]		
106	0FT23482189//		AD		C	Metal film resistor (ERG2SJW680D)(Japan,100V series) [R738,773]		
	0FT23482189//		AD		C	Metal film resistor (ERG2SJW680D)(200V series) [R773]		
107	0FT23562433//		AC		C	Metal film resistor (RSMF12SL 10ΩJ) [R739]		
108	0FT23563286//		AC		C	Metal film resistor (RSMF2SL 22ΩJ)(Japan,100V series) [R742]		
	0FT23563286//		AC		C	Metal film resistor (RSMF2SL 22ΩJ)(200V series) [R741,742,753]		
109	0FT23672824//		AD		C	Metal film resistor (ERG2SJW681D) [R743,744,776]		
110	0FT23527077//		AD		C	Metal film resistor (ERG2SJW220D) [R754]		
111	0FT23723062//		AD		C	Metal film resistor (RSMF2SL 0.1ΩJ) [R764]		
112	0FT23563154//		AD		C	Metal film resistor (RSMF2SL 0.22ΩJ) [R766]		
113	0FT23562484//		AD		C	Metal film resistor (RSMF12SL 47ΩJ) [R768]		
114	0FT23563308//		AD		C	Metal film resistor (RSMF2SL 47ΩJ)(200V series) [R787]		
115	0FT23418413//		AC		C	Carbon resistor (RDMF14-FX 180ΩJ) [RX701]		
116	0FT23418618//		AC		C	Carbon resistor (RDMF14-FX 4.7KΩJ)(Japan,100V series) [RX702,706,711]		
	0FT23418618//		AC		C	Carbon resistor (RDMF14-FX 4.7KΩJ)(Japan,100V series) [RX731,734,750]		
	0FT23418480//		AC		C	Carbon resistor (RDMF14-FX 560ΩJ)(200V series) [RX702]		
	0FT23418618//		AC		C	Carbon resistor (RDMF14-FX 4.7KΩJ)(200V series) [RX706,711,731]		
	0FT23418618//		AC		C	Carbon resistor (RDMF14-FX 4.7KΩJ)(200V series) [RX734,750]		
117	0FT23418685//		AC		C	Carbon resistor (RDMF14-FX 12KΩJ)(Japan,100V series) [RX704,710]		
	0FT23418715//		AC		C	Carbon resistor (RDMF14-FX 22KΩJ)(Japan,100V series) [R709,720,730,749,767]		
	0FT23418715//		AC		C	Carbon resistor (RDMF14-FX 22KΩJ)(200V series) [RX704]		
	0FT23418456//		AC		C	Carbon resistor (RDMF14-FX 330ΩJ)(200V series) [RX710]		
	0FT23418715//		AC		C	Carbon resistor (RDMF14-FX 22KΩJ)(200V series) [R709,719,720,730,749,767]		
118	0FT23418456//		AC		C	Carbon resistor (RDMF14-FX 330ΩJ)(Japan,100V series) [RX705]		
	0FT23418456//		AC		C	Carbon resistor (RDMF14-FX 330ΩJ)(200V series) [RX705]		
119	0FT23418774//		AC		C	Carbon resistor (RDMF14-FX 56KΩJ) [RX707]		
120	0FT23418529//		AC		C	Carbon resistor (RDMF14-FX 1.2KΩJ) [RX708]		
121	0FT23418510//		AC		C	Carbon resistor (RDMF14-FX 1KΩJ)(Japan,100V series) [RX709,R705,740,756]		
	0FT23418510//		AC		C	Carbon resistor (RDMF14-FX 1KΩJ)(Japan,100V series) [R759,763,774,775,778]		
	0FT23418510//		AC		C	Carbon resistor (RDMF14-FX 1KΩJ)(Japan,100V series) [R779]		
	0FT23418510//		AC		C	Carbon resistor (RDMF14-FX 1KΩJ)(200V series) [RX709,R740,756,759]		

56 DC Power supply PWB

NO.	PARTS CODE	COMPATIBLE	PRICE RANK	NEW MARK	PART RANK	DESCRIPTION	TR NO.	VALID
121	0FT23418510//		AC		C	Carbon resistor (RDMF14-FX 1KΩJ)(200V series) [R763,774,775,778,779]		
122	0FT23418359//		AC		C	Carbon resistor (RDMF14-FX 56ΩJ) [RX712]		
123	0FT23419789//		AC		C	Carbon resistor (RDF14-FB 470KΩJ) [R701]		
124	0FT23418642//		AC		C	Carbon resistor (RDMF14-FX 6.8KΩJ) [R708,762]		
125	0FT23418731//		AC		C	Carbon resistor (RDMF14-FX 33KΩJ)(Japan,100V series) [R727]		
	0FT23418766//		AC		C	Carbon resistor (RDMF14-FX 47KΩJ)(Japan,100V series) [R746]		
	0FT23418766//		AC		C	Carbon resistor (RDMF14-FX 47KΩJ)(200V series) [R727,746]		
126	0FT23419673//		AC		C	Carbon resistor (RDF14-FB 82KΩJ)(Japan,100V series) [R728,729]		
	0FT23419754//		AC		C	Carbon resistor (RDF14-FB 270KΩJ)(200V series) [R728,729]		
127	0FT23418669//		AC		C	Carbon resistor (RDMF14-FX 10KΩJ)(Japan,100V series) [R747]		
	0FT23418685//		AC		C	Carbon resistor (RDMF14-FX 12KΩJ)(200V series) [R747]		
128	0FT23418553//		AC		C	Carbon resistor (RDMF14-FX 2.2KΩJ) [R748,772]		
129	0FT23418383//		AC		C	Carbon resistor (RDMF14-FX 100ΩJ) [R755]		
130	0FT23418561//		AC		C	Carbon resistor (RDMF14-FX 2.7KΩJ) [R757,758,760,784]		
131	0FT23418804//		AC		C	Carbon resistor (RDMF14-FX 100KΩJ) [R761]		
132	0FT23418340//		AC		C	Carbon resistor (RDMF14-FX 47ΩJ) [R770]		
133	0FT23418472//		AC		C	Carbon resistor (RDMF14-FX 470ΩJ) [R777]		
134	0FT23418421//		AC		C	Carbon resistor (RDMF14-FX 220ΩJ) [R785,786]		
135	0FT23661709//		AD		C	Metal film resistor (RNM14FX 1KΩ DK) [R781,782]		
136	0FT33045018//		AU		B	Varister (ERZV10D821)(200V series) [NR701]		
137	0FT23607259//		AE		C	Ferrite beads (BL02RN1-R62)(Japan,100V series) [FB705,706,710]		
	0FT23607259//		AE		C	Ferrite beads (BL02RN1-R62)(Japan,100V series) [FB711,712,713]		
	0FT23607259//		AE		C	Ferrite beads (BL02RN1-R62)(Japan,100V series) [FB714,715,716]		
	0FT23607259//		AE		C	Ferrite beads (BL02RN1-R62)(Japan,100V series) [FB717,718,719]		
	0FT23607259//		AE		C	Ferrite beads (BL02RN1-R62)(Japan,100V series) [FB720,721,723]		
	0FT23607259//		AE		C	Ferrite beads (BL02RN1-R62)(Japan,100V series) [FB724,725]		
	0FT23607259//		AE		C	Ferrite beads (BL02RN1-R62)(200V series) [FB701,702,705]		
	0FT23607259//		AE		C	Ferrite beads (BL02RN1-R62)(200V series) [FB706,710,711]		
	0FT23607259//		AE		C	Ferrite beads (BL02RN1-R62)(200V series) [FB712,713,714]		
	0FT23607259//		AE		C	Ferrite beads (BL02RN1-R62)(200V series) [FB715,716,717]		
	0FT23607259//		AE		C	Ferrite beads (BL02RN1-R62)(200V series) [FB718,719,720]		
	0FT23607259//		AE		C	Ferrite beads (BL02RN1-R62)(200V series) [FB721,723,724]		
	0FT23607259//		AE		C	Ferrite beads (BL02RN1-R62)(200V series) [FB725]		
138	0FT23437531//		AG		C	Ferrite beads (B-20L-48B)(200V series) [FB726,727]		
139	0FT33027230//		AE		C	Connector (B3(4-2)P-VH) [CN701]		
140	0FT23779548//		AP		C	Connector (DF1B-34DP-2.5DSA) [CN702]		
141	0FT23105423//		AE		C	Connector (RT-01N-2.3A) [TP701,702]		
142	0FT33017200//		AX		C	Fin (APH34200-187) [3]		
143	0FT23120260//		AD		C	Angle (AP47039-572-01) [8]		
144	0FT23215881//		AG		C	Card spacer (AP47030-063) [15]		
145	0FT23453847//		AC		C	Screw (3×12) [21]		
146	0FT23034135//		AC		C	Screw (3×8) [22]		
147	0FT23423816//		AC		C	Screw (3×8) [24]		
148	0FT23249050//		AG		C	Fin (AP47039-958) [25]		
149	0FT33313209//		AG	N	C	Angle (APC42200-048) [1]		
	(Unit)							
⚠ 901	CPWBN1124FC33		CB	N	E	DC power supply PWB (Japan,100V series)		
⚠	CPWBN1125FC33		CE	N	E	DC power supply PWB (200V series)		

57 Sub AC PWB

NO.	PARTS CODE	COMPATIBLE	PRICE RANK	NEW MARK	PART RANK	DESCRIPTION	TR NO.	VALID
1	DHAi−2878FC11		AQ	N	C	Sub AC interface harness L		
2	DHAi−2879FCZZ		AG	N	C	Sub AC interface harness L		
3	PRDAF0071FCZZ		AK		C	Heat sink		
4	PSHEZ3777FCZZ		AD		C	Insulator sheet		
5	RMPTA0031FCZZ		AE		B	CR mix part (ECQ-J0186X) [CR1]		
6	RR−XZ0338FCZZ		AC		B	Fuse resistor (1W 820Ω) [FR1]		
7	RRLYD3222QCZZ		AL		B	Relay (JQ1-24V) [PR1]		
8	VCEAGU1VW107M		AB		C	Capacitor (35WV 100μF) [C1]		
9	VCQYNU1HM104K		AB		C	Capacitor (50WV 0.1μF) [C2]		
10	VHDDSS133//−1		AA		B	Diode (DSS133) [D1]		
11	VHDS1WBA60S−1		AD		B	Diode (S1WBA60S) [BD1]		
12	VHEHZ302L//−1		AC		B	Zener diode (HZ302L) [ZD1]		
13	VHPPC123Y//−1		AE		B	Photo transistor (PC123Y) [PC1]		
14	VHRS21ME4FY−1		AK		B	Photo triac (S21ME4FY) [SSR1]		
15	VHSTM1661P−LF		AQ		B	Thyristor (TM1661P) [TD1]		
16	VRD−HT2EY223J		AA		C	Resistor (1/4W 22KΩ ±5%) [R4]		
17	VRS−HT2HA101J		AA		C	Resistor (1/2W 100Ω ±5%) [R6]		
18	VRS−HT2HA201J		AA		C	Resistor (1/2W 200Ω ±5%) [R5]		
19	VRS−HT3AA103J		AA		C	Resistor (1W 10KΩ ±5%) [R1,2,3]		
20	VS2SC3332−/−1		AE		B	Transistor (2SC3332) [Q1]		
21	XBPSD30P08K00		AA		C	Screw (3×8K)		
	(Unit)							
901	CPWBF1239FC51		BE	N	E	Sub AC PWB (200V series)		

58 Exteriors

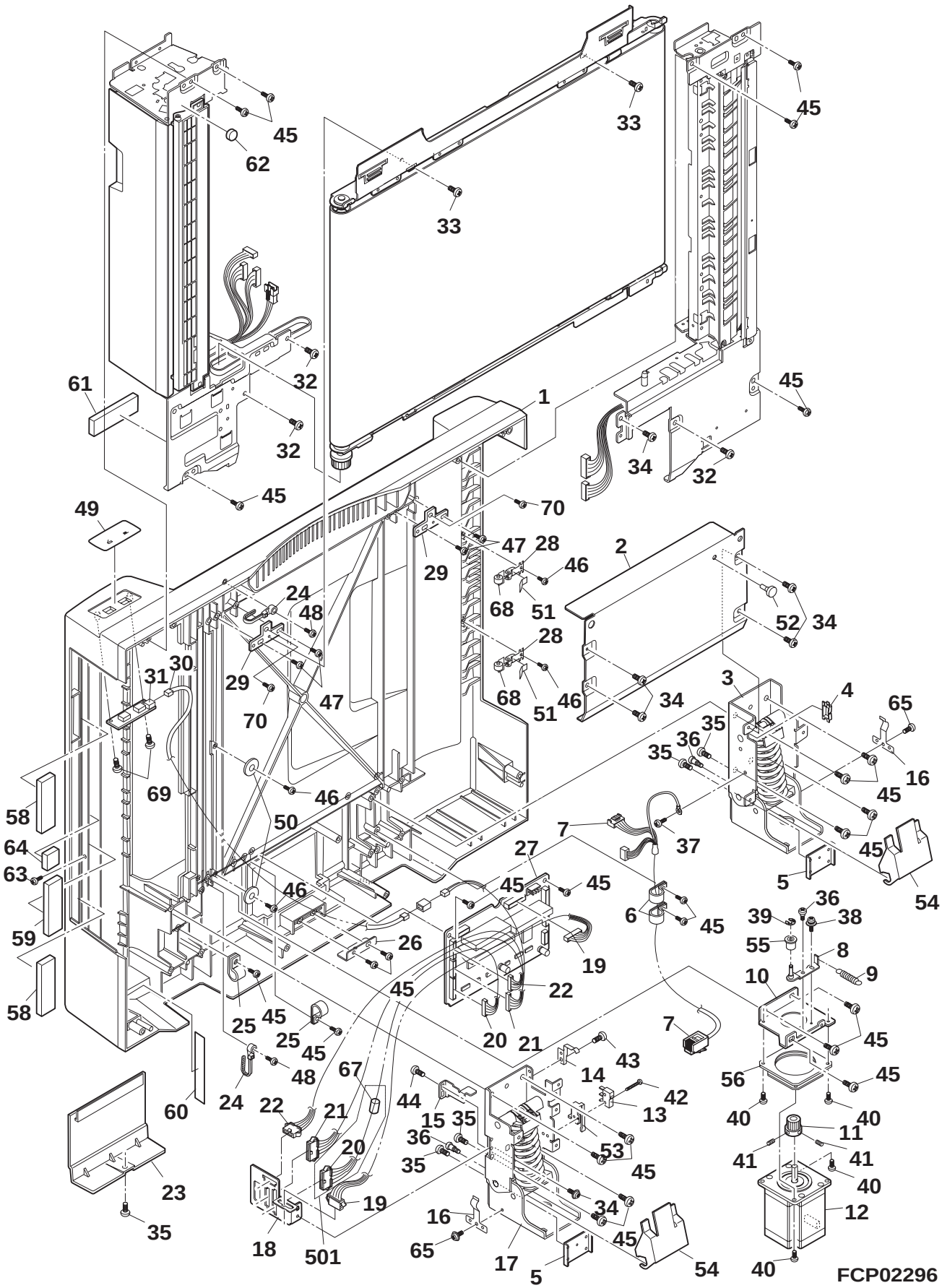

58 Exteriors

NO.	PARTS CODE	COMPATIBLE	PRICE RANK	NEW MARK	PART RANK	DESCRIPTION	TR NO.	VALID
1	0CW2214K114//		BS		E	DF cover sub ass'y		
2	0CW2214P127//		AR		C	Lower cover		
3	0CW2214K344//		BD	N	E	Hinge R ass'y		
4	0CWE450000433		AB		C	Edge saddle 1 (EDS-1)		
5	0CW2234P104//		AG	N	C	Hinge stopper		
6	0CWE450000070		AB		C	Wire clamp (NK-5N)		
7	0CW2214K212//		BB		C	ASM-IF harness		
8	0CW2214K054//		AH		C	Tension plate ass'y		
9	0CW2214P350//		AD		C	Belt tension spring		
10	0CW2214P110//		AL		C	DF motor bracket		
11	0CW2214P315//		AR		C	Pulley (PLY-S2M-24)		
12	0CW2223P404//		BN	N	B	Motor (MOT-KH56KM2-017)		
13	0CWE120000870		AM		B	Microswitch (SS-5T)		
14	0CW2214P126//		AG		C	DF earth plate spring		
15	0CW2214P117//		AF		C	DF open switch plate		
16	0CW2214P513//		AG		C	Hinge earth plate spring		
17	0CW2234K034//		BD	N	E	Hinge L ass'y		
18	0CW2214P135//		AE		C	Interface plate		
19	0CW2214K208//		AS		C	ASM-drive interface harness		
20	0CW2214K200//		AP		C	ASM-TR1 harness		
21	0CW2214K203//		AN		C	ASM-SNR harness		
22	0CW2214K206//		AN		C	ASM-sensor interface harness		
23	0CW2214P040//		AM		D	Mentenance cover		
24	0CWE450000368		AD		C	Clamp (T18MR)		
25	0CWE450000071		AC		C	Wire clamp (NK-6N)		
26	0CW2214P140//		AE		C	M plate		
27	0CW2234K212//		CA	N	E	PBA control PWB		
28	0CW2214P136//		AG		C	Delivery collar plate spring		
29	0CW2214P116//		AE		C	DF fixing plate (100V series)		
	0CW2217P135//		AG	N	C	Interface plate (200V series)		
30	0CW2214K205//		AL		C	ASM-LED harness		
31	0CW2214K223//		AU		E	PBA-LED PWB		
32	0CW040060FZTP		AA		C	Screw (4×6)		
33	0CW040040FZiT		AA		C	Screw (4×4)		
34	0CW030060FZTP		AA		C	Screw (3×6)		
35	0CW040080FNBi		AA		C	Screw (4×8)		
36	0CW2078P119B/		AB		C	Screw (M3×3.2)		
37	0CW040060FNBi		AA		C	Screw (4×6)		
38	0CW030060FZWS		AA		C	Screw (3×6)		
39	XRESP20-04000		AA		C	E type ring		
40	0CW040080FZBi		AA		C	Screw (4×8)		
41	0CW040060FPWP		AA		C	Screw (4×6)		
42	0CW023120FBWS		AB		C	Screw (2.3×12)		
43	0CW812531////		AA		C	Screw (3×8)		
44	0CW1001P441//		AG		C	Screw (3×6)		
45	0CW2185P359//		AB		C	Screw (4×12)		
46	0CW030080FZBB		AB		C	Screw (3×8)		
47	0CW2185P358//		AB		C	Screw (4×8)		
48	0CW030100FBBB		AB		C	Screw (3×10)		
49	0CW2223P318//		AS		D	Disply panel (Japan only)		
	0CW2223P319//		AN		D	Disply panel (Except Japan)		
50	0CW2095P053//		AE		C	Flange A		
51	0CW2214P453//		AD		C	Delivery collar sheet		
52	0CW2166P265//		AF		C	Spacer rubber		
53	0CW2158P003D/		AF		C	SW lever		
54	0CW2214P512//		AG		C	Hinge cover		
55	0CW2168P010//		AF		C	R tension collar		
56	0CW2221P336//		AU		C	Protect rubber		
58	0CW2214P496//		AE		C	A damper sheet W		
59	0CW2214P497//		AE		C	A damper sheet S		
60	0CW2214P489//		AH		C	Protect sheet L		
61	0CW2214P490//		AG		C	A side plate R damper		
62	0CW2158P504//		AK		C	Rubber support		
63	0CW040060FZWS		AA		C	Screw (4×6)		
64	0CW2214P498//		AE		C	Stopper cushion 4		
65	0CW2180P333//		AC		C	Screw (3×6)		
67	0CWE240000309		AP		B	Core (044S-665802)		
68	0CW2205P042//		AD		C	Delivery collar		
69	0CW2144P409//		AB		C	Screw (3×6)		
70	0CW030030FNiT		AB	N	C	Screw (3×3)		
501	0CW2214K217//		AU		C	ASM-TR1-C harness		
502	0CW2234K098//		BS	N	E	DF display ass'y (This includes No1,49)(Japan only)		
	0CW2234K099//		BS	N	E	DF display ass'y (This includes No1,49) (This includes No1,49)(Except Japan)		

59 Transport belt section

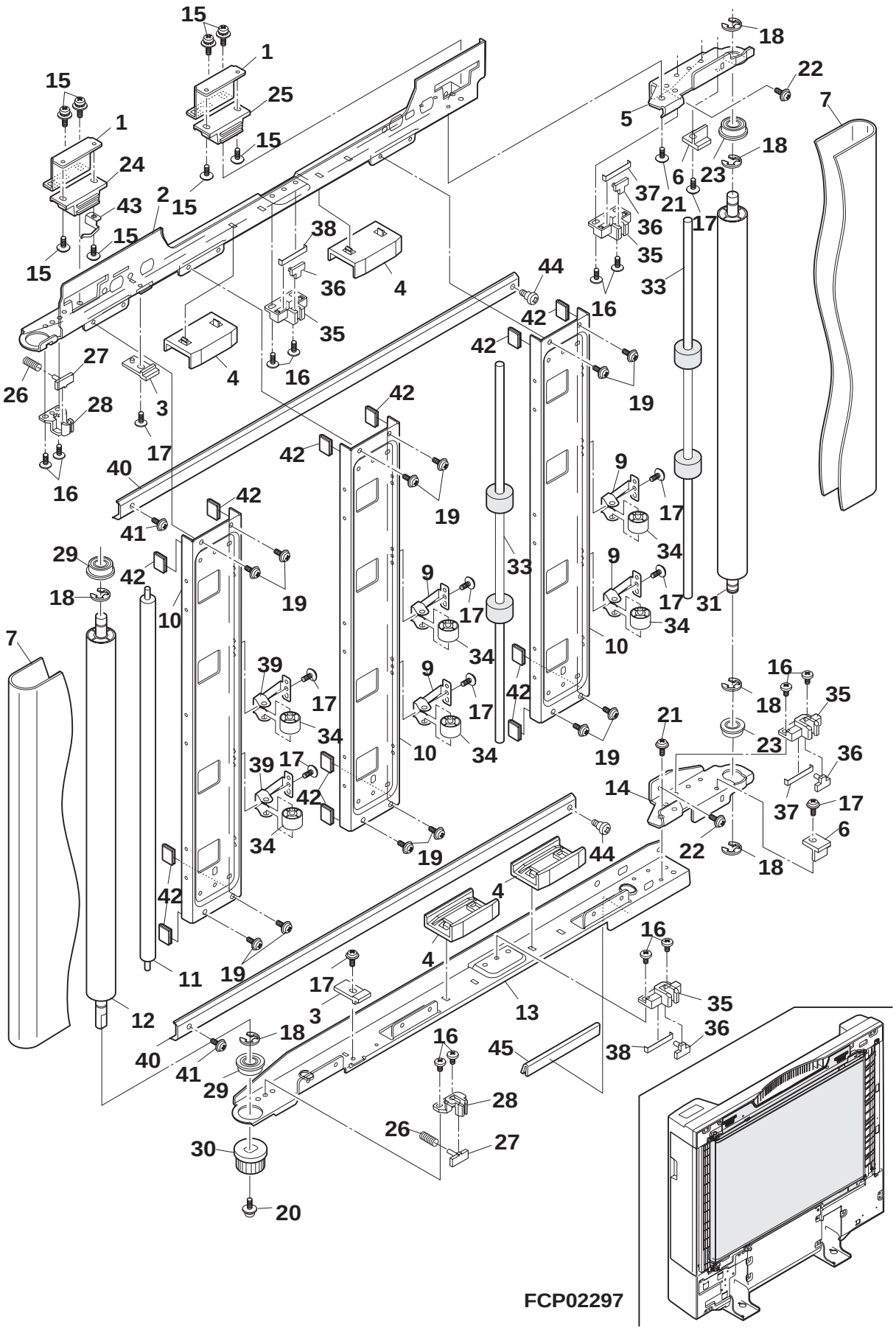

59 Transport belt section

NO.	PARTS CODE	COMPATIBLE	PRICE RANK	NEW MARK	PART RANK	DESCRIPTION	TR NO.	VALID
1	0CW2214P114//		AK		C	MG catch holder		
2	0CW2214P111//		AS		C	DF side plate F		
3	0CW2214P043//		AD		C	DF spacer L		
4	0CW2214P044//		AF		C	Belt guide		
5	0CW2214P138//		AH		C	Belt tension plate F		
6	0CW2214P042//		AD		C	DF spacer R		
7	0CW2214P353//		BR		B	DF belt (957-328)		
9	0CW2214P141//		AH		C	Fixer collar plate spring		
10	0CW2214P118//		AM		C	Fixer collar stay S		
11	0CW2214P462//		AZ		C	Roller SHP		
12	0CW2214P322//		BB		C	Belt roller L		
13	0CW2214P112//		AW		C	DF side plate R		
14	0CW2214P139//		AH		C	Belt tension plate R		
15	0CW030060FZSW		AA		C	Screw (3×6)		
16	0CW4016P167//		AC		C	Screw (SCR030050)		
17	0CW030060FZTP		AA		C	Screw (3×6)		
18	XRESP70-08000		AA		C	E type ring (7mm)		
19	0CW030060FNTP		AB		C	Screw (3×6)		
20	0CW030080FZWS		AA		C	Screw (3×8)		
21	0CW2078P023B/		AC		C	Screw (M3)		
22	0CW030060FZWS		AA		C	Screw (3×6)		
23	0CW650593////		AU		B	Bearing (BRG-LF-1280ZZ)		
24	0CW2214P393//		AG		B	Magnet catch 13N		
25	0CW2214P393//		AG		B	Magnet catch 13N		
26	0CW2205P360//		AD		C	Roller spring		
27	0CW2164P142//		AF		C	Belt roller spring holder		
28	0CW2214P051//		AD		C	Holder S		
29	0CW2160P344//		AR		B	Bearing (BRG8-16)		
30	0CW2185P023//		AE		B	A belt pulley 30		
31	0CW2214P321//		BB		C	Belt roller R		
33	0CW2205P351//		AU		C	Belt fixing roller		
34	0CW2158P035A/		AD		C	Fixing collar		
35	0CW2205P037//		AE		C	Fixing holder		
36	0CW2205P025//		AD		C	Pressure spacer		
37	0CW2205P147//		AC		C	Fixing roller spring		
38	0CW2205P147//		AC		C	Fixing roller spring		
39	0CW2214P157//		AK		C	Fixing collar plate spring L		
40	0CW2214P520//		AU		C	Fixing holder		
41	0CW030060FZiT		AA		C	Screw (3×6)		
42	0CWZ0030WE004		AC		C	Ege saddle (CE-012S)		
43	0CW2214P149//		AG		C	MG earth plate		
44	0CW2214P569//		AB	N	C	Screw (M3)		
45	0CW2234P410//		AR	N	C	Gasket (200V series)		

60 Paper feeding transport section 1

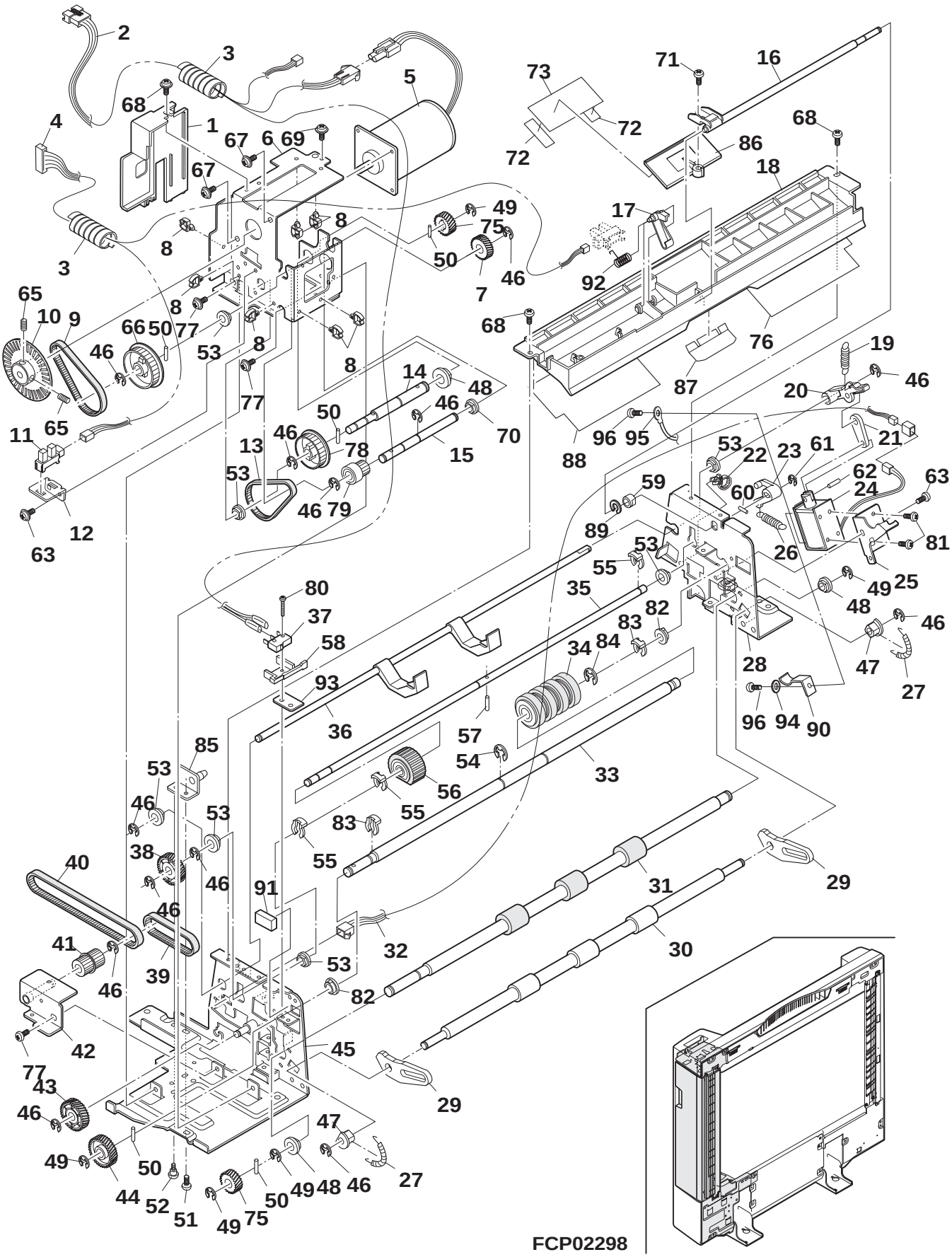

60 Paper feeding transport section 1

NO.	PARTS CODE	COMPATIBLE	PRICE RANK	NEW MARK	PART RANK	DESCRIPTION	TR NO.	VALID
1	0CW2214P037//		AH		C	Harness guide		
2	0CW2214K209//		AR		C	ASM-drive F harness		
3	0CW2214P405//		AD		C	SP tube 1		
4	0CW2214K204//		AH		C	ASM-sensor 1 harness		
5	0CW2234P401//		BM	N	B	Motor (MOT-NA4565B02)		
6	0CW2214P108//		AT		C	PF motor bracket		
7	0CW2214P316//		AS		C	Gear (GER-0.75-24H-0W)		
8	0CWE450000897		AC		C	Clamp (UAMS-05SN-W)		
9	0CW2214P341//		AP		C	Belt (BLT-S2M166-6)		
10	0CW2214P340//		AV		C	Clock pulley (PLY-S2M-20)		
11	0CWE314000531		AN		B	Photo interrupter (TLP1225(C5))		
12	0CW2214P109//		AE		C	PF sensor bracket		
13	0CW2214P319//		AP		B	Belt (BLT-S2M138-6)		
14	0CW2214P206//		AP		C	Shaft 2		
15	0CW2214P205//		AK		C	Shaft 1		
16	0CW2214P019//		AP		C	Weight lever shaft		
17	0CW2214P020//		AE		C	Lever		
18	0CW2214P007//		AT		C	Guide		
19	0CW2214P314//		AD		C	Shutter spring		
20	0CW2214P023//		AE		C	Lever		
21	0CW2214P036//		AE		C	Shutter link		
22	0CWE450000871		AB		C	Snap band (SG-110)		
23	0CW2214P021//		AE		C	Weight lever		
24	0CW2214P403//		AY		B	Solenoid (SOL-TDS-10SL-102)		
25	0CW2214P101//		AE		C	S solenoid bracket		
26	0CW2214P313//		AD		C	Weight spring		
27	0CW2214P312//		AD		C	Resist spring		
28	0CW2214P104//		AR		C	A side plate F		
29	0CW2214P022//		AE		C	Resist link		
30	0CW2214P302//		AX		C	Resist pinch roller		
31	0CW2214P301//		BB		C	Resist roller		
32	0CW2214K216//		AH		C	ASM-SOL harness		
33	0CW2214P200//		AZ		C	Shaft		
34	0CW2214P339//		BA		C	Roller		
35	0CW2214P201//		AV		C	Pick up shaft		
36	0CW2214P300//		AU		C	Shutter		
37	0CWE120000870		AM		B	Microswitch (SS-5T)		
38	0CW2214P317//		AS		C	Gear (GER-0.75-32H-0W)		
39	0CW2214P318//		AR		B	Belt (BLT-B100-S2M120)		
40	0CW2214P320//		AQ		B	Belt (BLT-B60-S2M248)		
41	0CW2214P031//		AF		C	Pulley (PLY-S2M-24)		
42	0CW2214K033//		AL		C	Idler bracket ass'y		
43	0CW2214P342//		AS		C	Gear (GER-0.75-H-0W)		
44	0CW2214P032//		AF		C	Gear (GER-0.75-32H)		
45	0CW2214K027//		AX		C	A side plate R ass'y		
46	XRESP50-06000		AA		C	E type ring (5mm)		
47	0CW690381////		AE		C	Bearing MF		
48	0CW319300////		AD		B	Bearing (8MM)		
49	XRESP70-08000		AA		C	E type ring (7mm)		
50	0CWHP020120SC		AC		C	Pin (φ2-12)		
51	0CW1001P441//		AG		C	Bolt (3×6)(BOT-SW-HW CAP)		
52	0CW2078P023B/		AC		C	Screw (M3)		
53	0CW2158P521B/		AE		C	Bearing 6		
54	XRESP80-09000		AA		C	E type ring		
55	0CW2166P034//		AD		C	Clip-5		
56	0CW2214P471//		AQ		C	Semicircular roller SHP		
57	0CWHP020140SC		AC		C	Pin (φ2-14)		
58	0CW2158P003D/		AF		C	Switch lever		
59	0CW338432////		AC		B	Bearing 4		
60	0CWHP020060SC		AC		C	Pin (φ2-6)		
61	XRESP30-05000		AA		C	E type ring (3mm)		
62	0CW030100FPA/		AA		C	Spring pin (φ3×10)		
63	0CW030060FZTP		AA		C	Screw (3×6)		
65	0CW030080FPWP		AB		C	Screw (3×8)		
66	0CW2198P003//		AH		C	Pulley (PLY-S2M-56)		
67	0CW030060FZiT		AA		C	Screw (3×6)		
68	0CW4016P167//		AC		C	Screw (SCR030050)		
69	0CW2158P377//		AB		C	Screw (3×4)		
70	0CW338422////		AB		B	Bearing 6		
71	0CW030080FZWS		AA		C	Screw (3×8)		
72	0CW2214P469//		AE		C	PWR sheet 2		
73	0CW2214P456//		AG		C	PWR sheet		
75	0CW2168P029//		AF		C	Gear (GER-0.75-21H-L)		
76	0CW2214P491//		AH		C	Curl sheet F-K		
77	0CW040060FZBP		AB		C	Screw (4×6)		
78	0CW2168P030//		AG		C	Pulley (PLY-S2M-50)		
79	0CW2142P037//		AS		C	Pulley (PLY18 O/W)		
80	0CW023140FBWS		AC	N	C	Screw (2.3×14)		
81	0CW030030FZiT		AB		C	Screw (3×3)		
82	0CW2078P652//		AE		C	Bearing 8		

60 Paper feeding transport section 1

NO.	PARTS CODE	COMPATIBLE	PRICE RANK	NEW MARK	PART RANK	DESCRIPTION	TR NO.	VALID
83	0CW2088P034//		AK		C	Stopper 6		
84	0CW2095P310//		AD		C	Stopper 8		
85	0CW2214K101//		AL		C	DF support plate ass'y		
86	0CW2234P008//		AG	N	C	Weight		
87	0CW2214P524//		AG		C	Weight sheet		
88	0CW2214P492//		AH		C	Curl sheet R-K		
89	0CW2129P188//		AD		C	Crip (CLIP 3)		
90	0CW2223P101//		AD		C	A earth spring		
91	0CW2214P531//		AC		C	Spacer		
92	0CW2234P301//		AF	N	C	Lever spring		
93	0CW2214P528//		AC	N	C	MSW sheet		
94	0CWHW030FZM//		AA	N	C	Washer		
95	0CW2198K239//		AG		C	ASM-earth wire 2		
96	0CW030030FNiT		AB	N	C	Screw (3×3)		

61 Paper feeding transport section 2

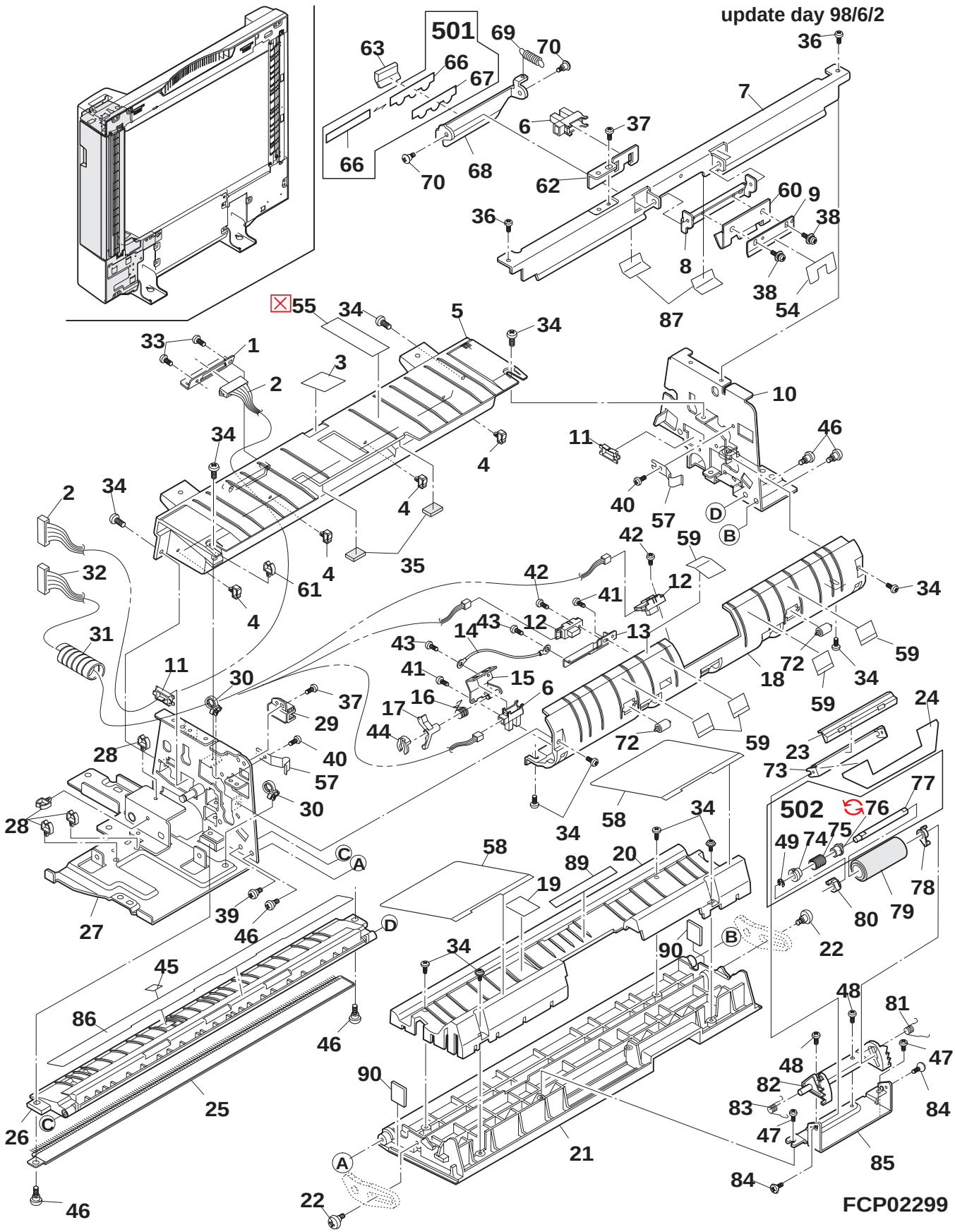

61 Paper feeding transport section 2

NO.	PARTS CODE	COMPATIBLE	PRICE RANK	NEW MARK	PART RANK	DESCRIPTION	TR NO.	VALID
1	0CW2214P102//		AE		C	Tray connector bracket		
2	0CW2214K201//		AP		C	ASM-TR2 harness		
3	0CW2214P343//		AE		C	Pick up sheet		
4	0CWE450000896		AC		C	Clamp (UAMS-02WH-2)		
5	0CW2214P006//		AY		C	A tray guide		
6	0CWE314000528		AL		B	Photo interrupter (TLP1240(C5))		
7	0CW2214P132//		AM		C	Stay		
8	0CW2214P131//		AG		C	Bracket		
9	0CW2214P155//		AG		C	Plate 2		
10	0CW2214P104//		AR		C	A side plate F		
11	0CWE450000433		AB		C	Edge saddle 1 (EDS-1)		
12	0CW2214K224//		AS		E	PBA-sensor PWB		
13	0CW2214P134//		AF		C	Resist sensor bracket		
14	0CW2214K214//		AG		C	ASM-earth wire W		
15	0CW2214K032//		AK		C	Sensor bracket ass'y		
16	0CW2214P311//		AF		C	Sensor spring		
17	0CW2214P030//		AE		C	Sensor lever		
18	0CW2214P009//		AX		C	U-turn guide		
19	0CW2214P307//		AD		C	Seal		
20	0CW2234P007//		AS	N	C	Resist guide		
21	0CW2214P008D/		BA	N	C	Paper feeding cover		
22	0CW2214P303//		AD		C	Screw		
23	0CW2214P035C/		AF		C	Fixing plate		
24	0CW2214P344//		AE		C	Sheet		
25	0CW2214P306//		AV		B	A discharge brush		
26	0CW2214P010//		AV		C	Resist guide		
27	0CW2214K027//		AX		C	A side plate R ass'y		
28	0CWE450000897		AC		C	Clamp (UAMS-05SN-W)		
29	0CW2214P103//		AD		C	MSW cover		
30	0CWE450000871		AB		C	Snap band (SG-110)		
31	0CW2214P406//		AD		C	SP tube 2		
32	0CW2214K207//		AM		C	ASM-sensor 2 harness		
33	0CW030080FZBB		AB		C	Screw (3×8)		
34	0CW030060FZBi		AA		C	Screw (3×6)		
35	0CW2199P368//		AD		C	Stopper cushion		
36	0CW2158P377//		AB		C	Screw (3×4)		
37	0CW030060FZBP		AA		C	Screw (3×6)		
38	0CW030040FZWS		AA		C	Screw (3×4)		
39	0CW2078P023B/		AC		C	Screw (M3)		
40	0CW030060FZTP		AA		C	Screw (3×6)		
41	0CW030040FZBi		AA		C	Screw (3×4)		
42	0CW030100FZBi		AA		C	Screw (3×10)		
43	0CW030060FNBi		AA		C	Screw (3×6)		
44	0CW2129P188//		AD		C	Crip (CLIP 3)		
45	0CW2198P302//		AD		C	Mirror seal		
46	0CW2078P086B/		AB		C	Screw 2.2 (M3)		
47	0CW030040FZiT		AA		C	Screw (3×4)		
48	0CW4016P167//		AC		C	Screw (SCR030050)		
49	XRESP40-06000		AA		C	E type ring (4mm)		
54	0CW2214P477//		AH		C	Front plate rubber		
55	0CW2214P475//		AE		C	Shutter F sheet		
	☒ 0CW2214P475//				C	SHUTTER F MYLAR(FROM 1ST LOT)	SP2266	
57	0CW2214P455//		AE		C	Lock plate spring		
58	0CW2214P521//		AF		C	Resist guide sheet		
59	0CW2214P458//		AG		C	U turn guide sheet		
60	0CW2214P154//		AH		C	Spring		
61	0CWE450000574		AC		C	Wire clamp (UAMS-05S-2)		
62	0CW2214P144//		AF		C	EMP sensor bracket		
63	0CW2234P322//		AH	N	C	Rubber 1		
66	0CW2214P494//		AD		C	Plate 1 sheet (Japan only)		
	0CW2214P486//		AD		C	Plate 1 sheet (Except Japan)		
67	0CW2214P487//		AF		C	Sheet (Except Japan)		
68	0CW2223P102//		AH		C	Plate 1		
69	0CW2214P485//		AD		C	Spring		
70	0CW2078P119B/		AB		C	Screw		
72	0CW2205P050//		AD		C	Resist collar		
73	0CW2205P153//		AF		C	Separator stay		
74	0CW2214P048//		AG		C	Reverse drum		
75	0CW2214P372//		AH		C	Spring		
76	0CW2214P052E/		AR	N	C	Reverse joint (Japan only)		
	0CW2214P047//		AG		C	Reverse joint (Except Japan)		
77	0CW2214P213//		AK		C	Separator shaft		
78	0CW2205P052//		AE		C	Slide bearing		
79	0CW2231K064//		AY	N	C	Separator roller DX		
80	0CW2205P051//		AE		B	Bearing (ϕ5)		
81	0CW2214P391//		AG		C	Separator pressure spring F		
82	0CW2205P035//		AF		C	Separator roller holder		
83	0CW2214P392//		AG		C	Separator pressure spring R		
84	0CW020050FZSA		AB		C	Screw (2×5)		
85	0CW2205P152//		AK		C	Separator bracket		

61 Paper feeding transport section 2

NO.	PARTS CODE	COMPATIBLE	PRICE RANK	NEW MARK	PART RANK	DESCRIPTION	TR NO.	VALID
86	0CW2214P376//		AH		C	Resist sheet		
87	0CW2214P493//		AG		C	Stay edge sheet		
89	0CW2214P454//		AD		C	Sheet		
90	0CW2158P348A/		AD		C	Cushion		
501	0CW2214K116//		AH	N	E	Sheet ass'y (Except Japan)		
502	0CW2234K110//		AZ	N	E	Separator shaft ass'y JP (Japan only)		
	0CW2214K145//		AY	N	E	Separator shaft ass'y S (Except Japan)		

62 Reversion transport section

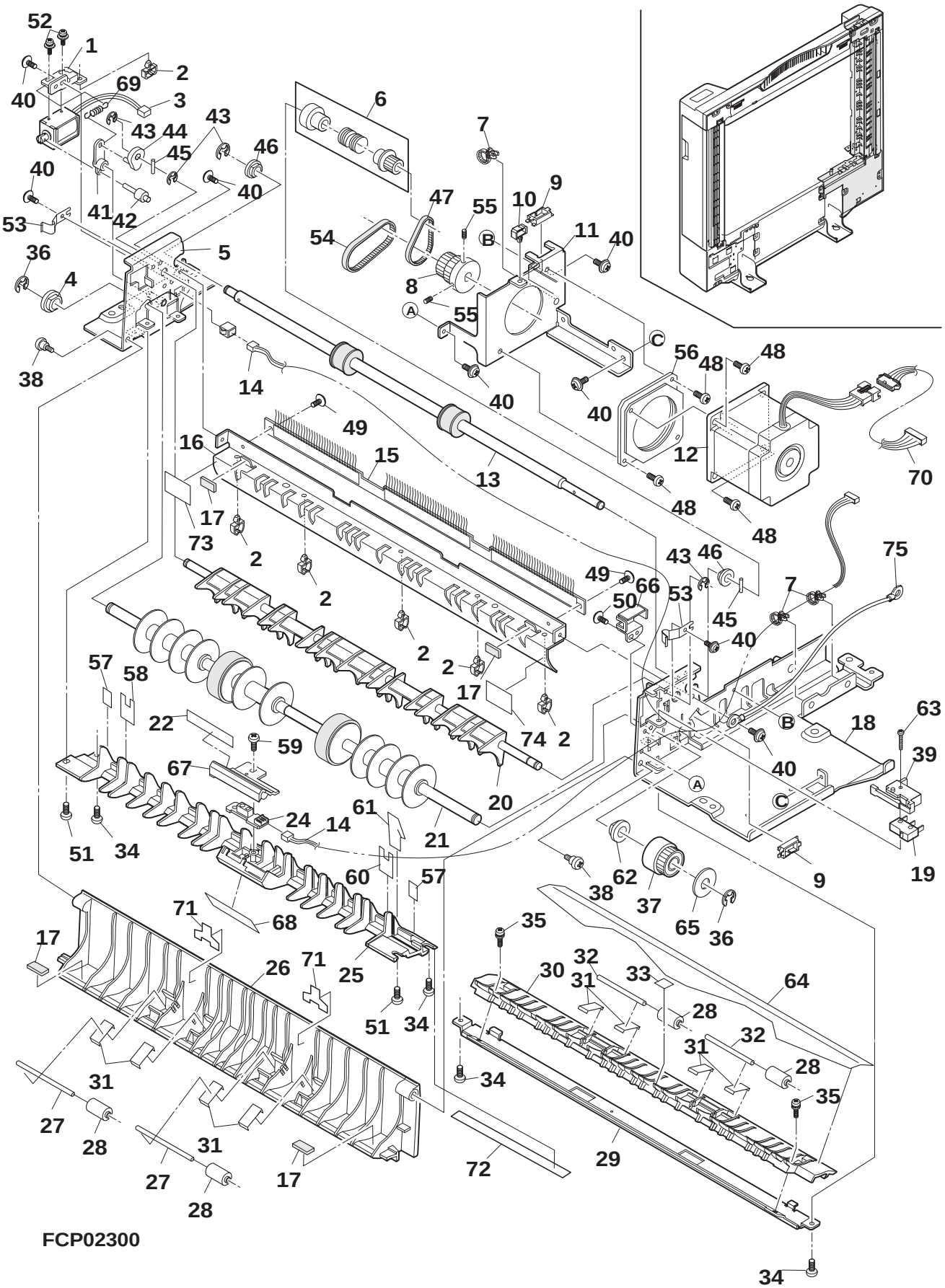

FCP02300

62 Reversion transport section

NO.	PARTS CODE	COMPATIBLE	PRICE RANK	NEW MARK	PART RANK	DESCRIPTION	TR NO.	VALID
1	0CW2214P113//		AF		C	Flapper solenoid bracket		
2	0CWE450000574		AC		C	Wire clamp (UAMS-05S-2)		
3	0CW2214P402//		AU		B	Solenoid (SOL-TDS-06A-4013)		
4	0CW319300////		AD		B	Bearing (8MM)		
5	0CW2214K004//		AR		C	Turn over side plate F ass'y		
6	0CW2214P349//		AN		C	Pulley (PLY-S2M-17-0W)		
7	0CWE450000871		AB		C	Snap band (SG-110)		
8	0CW2214P348//		AX		C	Pulley (PLY-S2M-28-31)		
9	0CWE450000842		AC		C	Edge saddle (EDS-0607M)		
10	0CWE450000896		AC		C	Clamp (UAMS-02WH-2)		
11	0CW2214P120//		AQ		C	Turn over motor bracket		
12	0CW2234P400//		BK	N	B	Motor (MOT-KH56JM2B013)		
13	0CW2214P323//		AV		C	R delivery roller		
14	0CW2214K211//		AL		C	ASM-RU harness		
15	0CW2214P377//		AS		B	Delivery discharge brush		
16	0CW2214P143//		AP		C	R guide 2		
17	0CW2214P347//		AD		C	Flapper rubber		
18	0CW2214K002//		AW		C	Turn over side plate R ass'y		
19	0CWE120000870		AM		B	Microswitch (SS-5T)		
20	0CW2214P332//		AV		C	Flapper		
21	0CW2214P331//		BD		C	Turn over roller		
22	0CW2214P381//		AD		C	H sensor upper sheet		
24	0CW2214K222//		AS		E	PBA sensor PWB		
25	0CW2214P012//		AR		C	R lower guide		
26	0CW2214P015//		AX		C	Turn over guide cover		
27	0CW2214P209//		AE		C	U turn over collar shaft		
28	0CW2214P033//		AE		C	Turn over collar		
29	0CW2214P130B/		AP	N	C	H reinforce plate		
30	0CW2214P011//		AQ		C	Lower guide		
31	0CW2214P124//		AE		C	Turn over collar plate spring		
32	0CW2214P208//		AD		C	Turn over collar shaft		
33	0CW2214P352//		AD		C	Turn over seal		
34	0CW030060FZBi		AA		C	Screw (3×6)		
35	0CW030060FZSW		AA		C	Screw (3×6)		
36	XRESP70-08000		AA		C	E type ring (7mm)		
37	0CW2214P328//		AS		C	Pulley (PLY-S2M-30-0W)		
38	0CW2078P086B/		AB		C	Screw 2.2 (M3)		
39	0CW2158P003D/		AF		C	Switch lever		
40	0CW030060FZTP		AA		C	Screw (3×6)		
41	0CW2158P009A/		AD		C	R flapper link		
42	0CW2158P005A/		AD		C	Solenoid stopper pin		
43	XRESP50-06000		AA		C	E type ring (5mm)		
44	0CW2147P033//		AD		C	R flapper link 1		
45	0CWHP020100SC		AC		C	Pin (φ2-10)		
46	0CW2158P521B/		AE		C	Bearing 6		
47	0CW2094P090A/		AH		C	Timing belt (44-40S2M88)		
48	0CW040080FZBi		AA		C	Screw (4×8)		
49	0CW4016P167//		AC		C	Screw (SCR030050)		
50	0CW030060FZBP		AA		C	Screw (3×6)		
51	0CW2214P529//		AC	N	C	Screw		
52	0CW030040FZBi		AA		C	Screw (3×4)		
53	0CW2214P455//		AE		C	Lock plate spring		
54	0CW2107P032//		AN		C	Belt (S2M-56-4)		
55	0CW040100FPWP		AC		C	Screw (4×10)		
56	0CW2221P336//		AU		C	Protect rubber		
57	0CW2214P464//		AE		C	R lower soft sheet		
58	0CW2214P459//		AD		C	R lower guide sheet F		
59	0CW030080FZBB		AB		C	Screw (3×8)		
60	0CW2214P460//		AD		C	R lower guide sheet R		
61	0CW2214P466//		AG		C	R lower sheet		
62	0CW338412////		AE		B	Bearing 8		
63	0CW023120FBWS		AB		C	Screw (2.3×12)		
64	0CW2214P472//		AP		C	Turn over sheet		
65	0CW2214P146//		AD		C	Belt flange		
66	0CW2214P103//		AD		C	MSW cover		
67	0CW2214P046//		AE		C	Turn over sensor cover		
68	0CW2214P383//		AE		C	H sensor lower sheet		
69	0CW2214P335//		AD		C	R flapper spring		
70	0CW2214K210//		AT		C	ASM-deive R harness		
71	0CW2214P387//		AE		C	Turn over guide sheet		
72	0CW2214P465//		AM		C	H belt guide sheet		
73	0CW2217P355//		AE	N	C	R guide2sheet F		
74	0CW2217P356//		AE	N	C	R guide2sheet R		
75	0CW2198K239//		AG		C	ASM-earth wire 2		

63 Paper feedig tray section

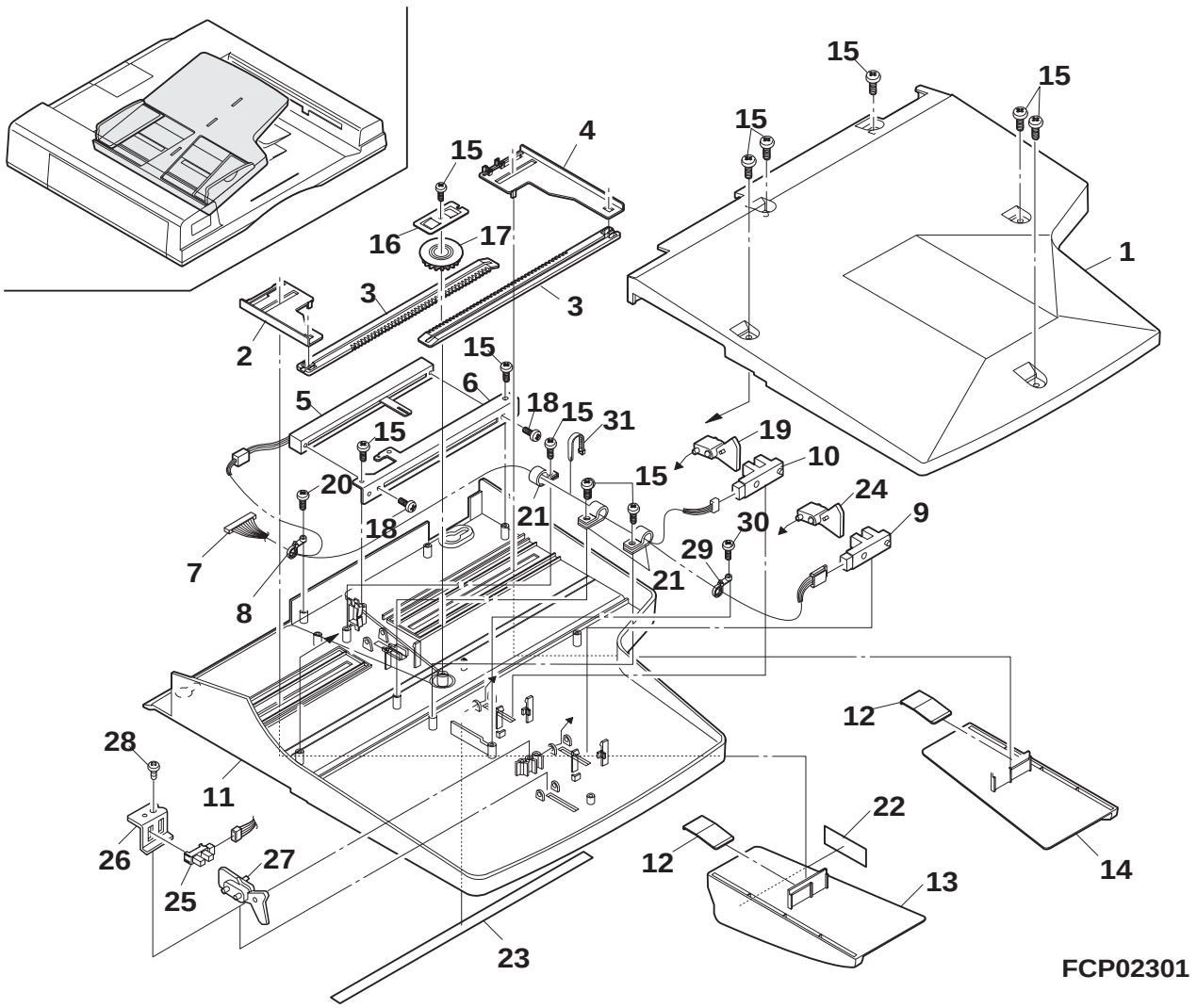

63 Paper feedig tray section

NO.	PARTS CODE	COMPATIBLE	PRICE RANK	NEW MARK	PART RANK	DESCRIPTION	TR NO.	VALID
1	0CW2214P016//		AZ		C	Tray cover		
2	0CW2214P005//		AG		C	Slide holder R		
3	0CW2214P004//		AF		C	Tray rack		
4	0CW2214P039//		AG		C	Slide holder F		
5	0CW2223K214//		AX	N	C	ARM-VR harness		
6	0CW2214P128//		AK		C	Slide switch bracket		
7	0CW2234K202//		AT	N	C	ASM-TRAY 2234 harness (Inch series·· Except U.S.A.,CANADA)		
	0CW2214K202E/		AS		C	ASM-TRAY harness (Other countries)		
8	0CWE450000368		AD		C	Clamp (T18MR)		
9	0CWE314000120		AM		B	Proto interrupter (GP1A25LC)(Except Japan,Europe)		
10	0CWE314000120		AM		B	Photo interrupter (GP1A25LC)		
11	0CW2214P017D/		BA	N	C	Original tray		
12	0CW2214P129//		AF		C	Tray guide plate spring		
13	0CW2214P002//		AK		C	Tray guide R		
14	0CW2214P003//		AK		C	Tray guide F		
15	0CW030080FZBB		AB		C	Screw (3×8)		
16	0CW2199P117//		AE		C	Tray plate spring		
17	0CW2142P180//		AE		C	Tray gear 22		
18	0CW030060FNBi		AA		C	Screw (3×6)		
19	0CW2234P004//		AH	N	C	Tray sensor lever		
20	0CW030100FBBB		AB		C	Screw (3×10)		
21	0CWE450000067		AC		C	Wire clamp (NK-2N)		
22	0CW2158P354A/		AC		C	Indication label		
23	0CW2198P360//		AR		D	Tray scale (AB) (AB series·· For Europe)		
	0CW2214P385//		AN		D	Tray scale (INCH) (inch series)		
	0CW2214P479//		AR		C	Tray scale (AB) (Japan only)		
	0CW2234P311//		AV	N	D	Tray scale (BA BE) (AB series·· Except Europe)		
24	0CW2234P004//		AH	N	C	Tray sensor lever (Except Japan,Europe)		
25	0CWE314000531		AN		B	Photo interrupter (TLP1225(C5))(Inch series·· Except U.S.A.,CANADA)		
26	0CW4054P074B/		AF		C	R-T sensor bracket (Inch series·· Except U.S.A.,CANADA)		
27	0CW2234P006//		AS	N	C	Tray sensor lever 13 (Inch series·· Except U.S.A.,CANADA)		
28	0CW030080FZBB		AB		C	Screw (3×8)(Inch series·· Except U.S.A.,CANADA)		
29	0CWE450000368		AD		C	Clamp (T18MR)(Inch series·· Except U.S.A.,CANADA)		
30	0CW030100FBBB		AB		C	Screw (3×10)(Inch series·· Except U.S.A.,CANADA)		
31	0CWE450000005		AA		C	Tight band (SKB-1N)(Japan,Europe)		
701	TLABH4259FCZZ	3	AH		C	HONG KONG DISPLAY LABEL(SF-C52,Q'TY:2)	S220	
	N TLABH4182FCZZ		AM	N		HONG KONG DISPLAY LABEL(HONG KONG)	-	97/11/01

64 Packing material & Accessories

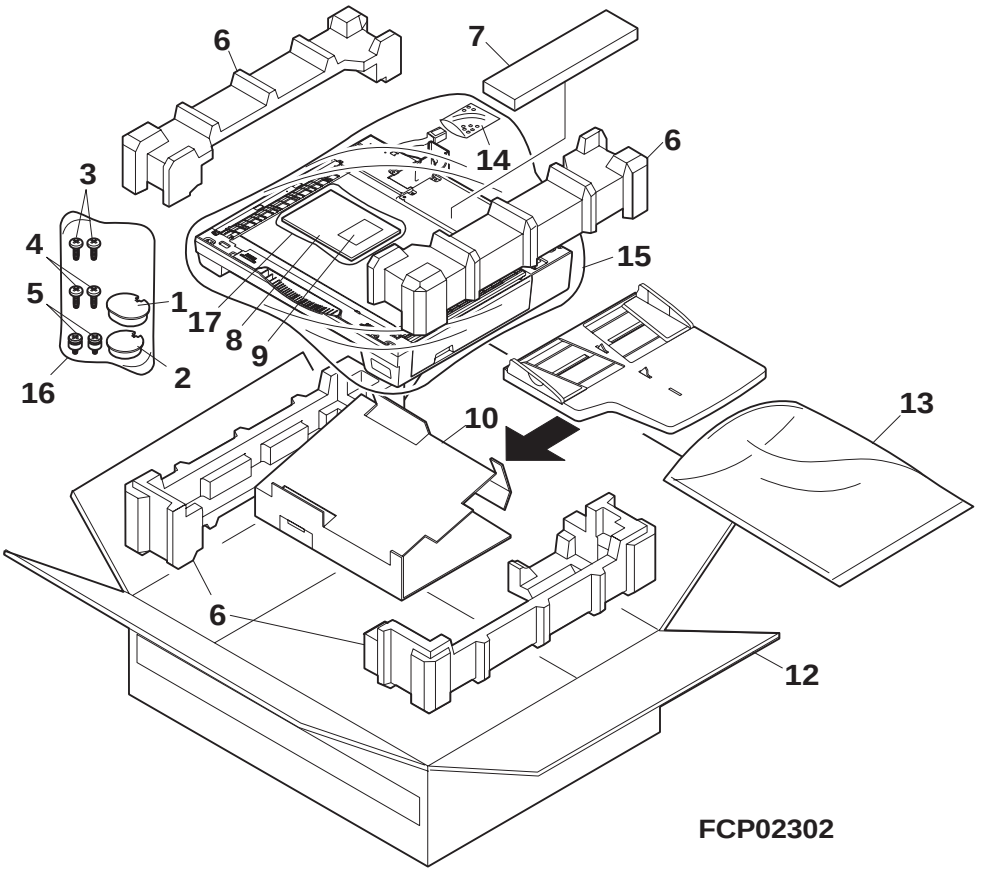

64 Packing material & Accessories

NO.	PARTS CODE	COMPATIBLE	PRICE RANK	NEW MARK	PART RANK	DESCRIPTION	TR NO.	VALID
1	PCÕVP0911FCZZ		AB		D	Upper exterior rear cover R		
2	PCÕVP0941FCZZ		AB		D	Upper exterior rear cover L		
3	0CW2214K113//		AD		C	Screw ass'y (4×8)		
4	XBTSC50P16000		AA		C	Screw (5×16)		
5	LX-BZ0776FCZZ		AG		C	Screw		
6	0CW2214K058//		BB		D	Packing add ass'y		
7	0CW2214P470//		AH		D	Fixing pad		
8	0CW2234P312//		AR	N	D	Card (Japanese) (Japan)		
	0CW2234P315//		AK	N	D	Card (English) (U.S.A.,Australia,U.Kingdom)		
	0CW2234P316//		AR	N	D	Card (E,F,G,S) (Other countries)		
9	0CW2234P320//		AN	N	D	Tag card (For Europe)		
10	0CW2214P384//		AP		D	Tray pad		
12	0CW2234P303//		BA	N	D	Packing case (Japan only)		
	0CW2234P305//		BA	N	D	Packing case (Except Japan)		
13	0CW2214P358//		AB		D	Vinyl bag 1 (500×550mm)		
14	0CW2158P380//		AE		D	Harness packing cushion S (150×120mm)		
15	0CW2148P093A/		AE		D	Vinyl bag (900×800mm)		
16	0CW616371////		AA		D	Vinyl bag C (80×120mm)		
17	0CW2111P021//		AC		D	Vinyl bag A (230×340mm)		

65 PBA-Control PWB

NO.	PARTS CODE	COMPATIBLE	PRICE RANK	NEW MARK	PART RANK	DESCRIPTION	TR NO.	VALID
1	0CWE73423M106		AC		C	Capacitor (CESEM1E100-F) [C10,C11]		
2	0CWE73303Z104		AB		C	Capacitor (GRM40F104Z25PT) [C35~C39,C42~C44,C46,C47,C49,C50]		
3	0CWE73268J101		AF		C	Capacitor (GRM40CH101J50PT) [C32,C33]		
4	0CWE73303Z105		AD		C	Capacitor (GRM40F105Z16PT) [C41,C45,C48,C51,C52,C59~C62]		
5	0CWE73431M107		AF		C	Capacitor (CEEFM1H101M5-F) [C53,C54]		
6	0CWE73423M476		AC		C	Capacitor (CESEM1C470M-F) [C55]		
7	0CWE73423M475		AC		C	Capacitor (CESEM1H4R7-F) [C57]		
8	0CWE73303Z224		AC		C	Capacitor (GRM40F224Z50PT) [C56]		
9	0CWE74212WE06		AE		C	Connector (DF1B-6P-25DSA) [CN4]		
10	0CWE74212WE08		AE		C	Connector (DF1B-8P-2.5DSA) [CN7]		
11	0CWE74212WE09		AE		C	Connector (DF1B-9P-25DSA) [CN5]		
12	0CWE323000317		AL		B	IC (93LC46TSN) [IC3]		
13	0CWE321000645		BB		B	IC (STK6713BMK4) [IC8]		
14	0CWE321000644		AZ		B	IC (STK6712BMK4) [IC12]		
15	0CWE312001362		AC		B	Transistor (FN1L3M) [Q12]		
16	0CWE312001293		AR		B	Transistor (2SJ265) [Q13]		
17	0CWE312001368		AK		B	FET (2SK1282-Z) [Q15]		
18	0CWE312001310		AC		B	Transistor (FA1L3M) [Q17]		
19	0CWE70162J101		AA		C	Resistor (CRG8SG101J) [R93,R94]		
20	0CWE70162J181		AA		C	Resistor (CRG8SG181J) [R100,R101]		
21	0CWE70188J203		AA		C	Resistor (CRG10G203J) [R105]		
22	0CWE70162J202		AA		C	Resistor (CRG8SG202J) [R106]		
23	0CWE70162J100		AA		C	Resistor (CRG8SG100J) [R118]		
24	0CWE70188J154		AA		C	Resistor (CRG10G154J) [R47]		
25	0CWE70213JR39		AC		C	Resistor (RSSX1U039ΩJ) [R97~R99]		
26	0CWE70188F751		AA		C	Resistor (CRG10G751F) [R67]		
27	0CWE70162J472		AA		C	Resistor (CRG8SG472J) [R25]		
28	0CWE70205J222		AC		C	Resistor (CRG2G222J) [R107]		
29	0CWE70188F243		AA		C	Resistor (CRG10G243F) [R39]		
30	0CWE70188F683		AA		C	Resistor (CRG10G683F) [R112,R113]		
31	0CWE70188F912		AA		C	Resistor (CRG10G912F) [R114]		
32	0CWE70188F153		AA		C	Resistor (CRG10G153F) [R116]		
33	0CWE420001011		AC		C	Test pin (LC-3-SBK) [TP2]		
34	0CWE76008H160		AD		B	Zener diode (RD16MB2) [ZD3]		
35	0CWE76008G180		AD		B	Zener diode (RD18MB1) [ZD5,ZD6,ZD7]		
36	0CWE73425M107		AD		C	Capacitor (CEDSM1H101M-F) [C1]		
37	0CWE73328K102		AB		C	Capacitor (GRM40B102K50PT) [C2~C7]		
38	0CWE73303Z334		AC		C	Capacitor (GRM40F344Z25PT) [C9]		
39	0CWE73328K103		AB		C	Capacitor (GRM40B103K50PT) [C12,C13,C16~C18,C21~C23]		
41	0CWE73303Z104		AB		C	Capacitor (GRM40F104Z25PT) [C14,C15,C19,C20,C25,C26,C28~C30]		
42	0CWE73425M476		AC		C	Capacitor (CEDSM1H470M-F) [C31,C40]		
43	0CWE73423M105		AC		C	Capacitor (DESEM1H010-F) [C34]		
44	0CWE74299BK06		AB		C	Connector (DF3-6P-2DSA) [CN9]		
46	0CWE74071WE04		AC		C	Connector (B4P-VH)(4pin) [CN6]		
50	0CWE311000978		AD		B	Diode (SB02-03Q) [D1,D3,D4]		
51	0CWE311000977		AB		B	Diode (DSA010) [D6]		
52	0CWE311001020		AE		B	Diode (SS14) [D7,D8]		
53	0CWE311001019		AD		B	Diode (S1G-G11) [D9]		
54	0CWE77002373A		AL		B	IC (TC74HC373AF) [IC1]		
55	0CWE74269BK28		AD		B	IC socket (2-641605-3) [for IC12]		
56	0CWE7700214A/		AG		B	IC (TC74HC14AF) [IC4]		
57	0CWE7702006//		AG		B	IC (HD74LS06PF) [IC5]		
58	0CWE321000320		AK		B	IC (M51953BFP) [IC6]		
59	0CW2198P422A/		AY		B	LSI (LSI-LC93043A-V54) [IC7]		
60	0CWE321000358		AG		B	IC (UPC339G2) [IC9]		
61	0CWE321000650		BB		B	IC (STK681-050) [IC10]		
62	0CWE323000280		BC		B	IC (uPD78233GC-3B9) [IC11]		
63	0CWE321000591		AF		B	IC (uPC358G2) [IC13,IC14]		
64	0CWE230000031		AK		C	Coil (SK-8MS-5Y) [L1,L2]		
65	0CWE314000337		AB		B	LED (GL3PR8) [LED1]		
66	0CWE250000107		AX		B	Crystal (CST9.83MTW) [OSC1]		
67	0CWE250000141		AG		B	Ceramic resonator (CST5.0MGW040) [OSC2]		
68	0CWE120000897		AD		B	Push switch (SKHHPK) [PSW1]		
69	0CWE312001240		AC		B	Transistor (FN1L3N) [Q1,Q2]		
70	0CWE312000082		AC		B	Transistor (2SC2712) [Q3~Q5]		
71	0CWE312001081		AB		B	Transistor (FA1L3N) [Q7~Q11]		
72	0CWE312001363		AG		B	FET (2SK1726) [Q14]		
73	0CWE70188J223		AA		C	Resistor (CRG10GJ223J) [R1~R5,R78,R79]		
74	0CWE70188J103		AA		C	Resistor (CRG10G103J) [R6~R13,R20~R24]		
	0CWE70188J103		AA		C	Resistor (CRG10G103J) [R26~R28,R30,R32~R38]		
	0CWE70188J103		AA		C	Resistor (CRG10G103J) [R40~R43,R64,R70,R86,]		
	0CWE70188J103		AA		C	Resistor (CRG10G103J) [R87]		

65 PBA-Control PWB

NO.	PARTS CODE	COMPATIBLE	PRICE RANK	NEW MARK	PART RANK	DESCRIPTION	TR NO.	VALID
75	0CWE70188J104		AA		C	Resistor (CRG10G104J) [R45,R46,R48,R49]		
76	0CWE70188J100		AA		C	Resistor (CRG10G100J) [R50]		
77	0CWE70188J472		AA		C	Resistor (CRG10G472J) [R31,R51~R62,R65,R68,]		
	0CWE70188J472		AA		C	Resistor (CRG10G472J) [R71~R73,R76,R77]		
78	0CWE70188J102		AA		C	Resistor (CRG10G102J) [R82,R83,R88]		
79	0CWE70188J105		AA		C	Resistor (CRG10G105J) [R90]		
80	0CWE70188J821		AA		C	Resistor (CRG10G821J) [R91]		
81	0CWE70197J4R7		AA		C	Resistor (ERD25FAJ4R7) [R44,R92]		
82	0CWE70188J202		AA		C	Resistor (CRG10G202J) [R80,R81]		
83	0CWE70188J153		AA		C	Resistor (CRG10G153J) [R29,R115]		
84	0CWE70188J152		AA		C	Resistor (CRG10G152J) [R63,R89]		
85	0CWE70188J302		AA		C	Resistor (CRG10G302J) [R74,R95]		
86	0CWE70205J332		AA		C	Resistor (CRG2G332J) [R108]		
87	0CWE70188J222		AA		C	Resistor (CRG10GJ222T) [R84]		
89	0CWE120000368		AR		B	Dip switch (KSD05) [SW1]		
90	0CWE76005A6R2		AE		B	Zener diode (RD6.2FB) [ZD1]		
91	0CWE76008H120		AB		B	Zener diode (RD12MB2) [ZD2]		
97	0CW2234K213//		AY	N	B	EP ROM ass'y -NMI [IC2]		
98	0CWE70014J101		AB		C	Resistor (RD25S 100ΩJ)		
99	0CWE70188J912		AA		C	Resistor (CRG10G912J) [R66]		
100	0CWE73425M477		AD	N	C	Capacitor CEDSM1A471M-F [C58]		
101	0CWE240000356		AS	N	C	Feright core ZCAT2035-0930A		
	(Unit)							
901	0CW2234K212//		CA	N	E	PBA control PWB		

66 Large capacity tray unit·· Exteriors

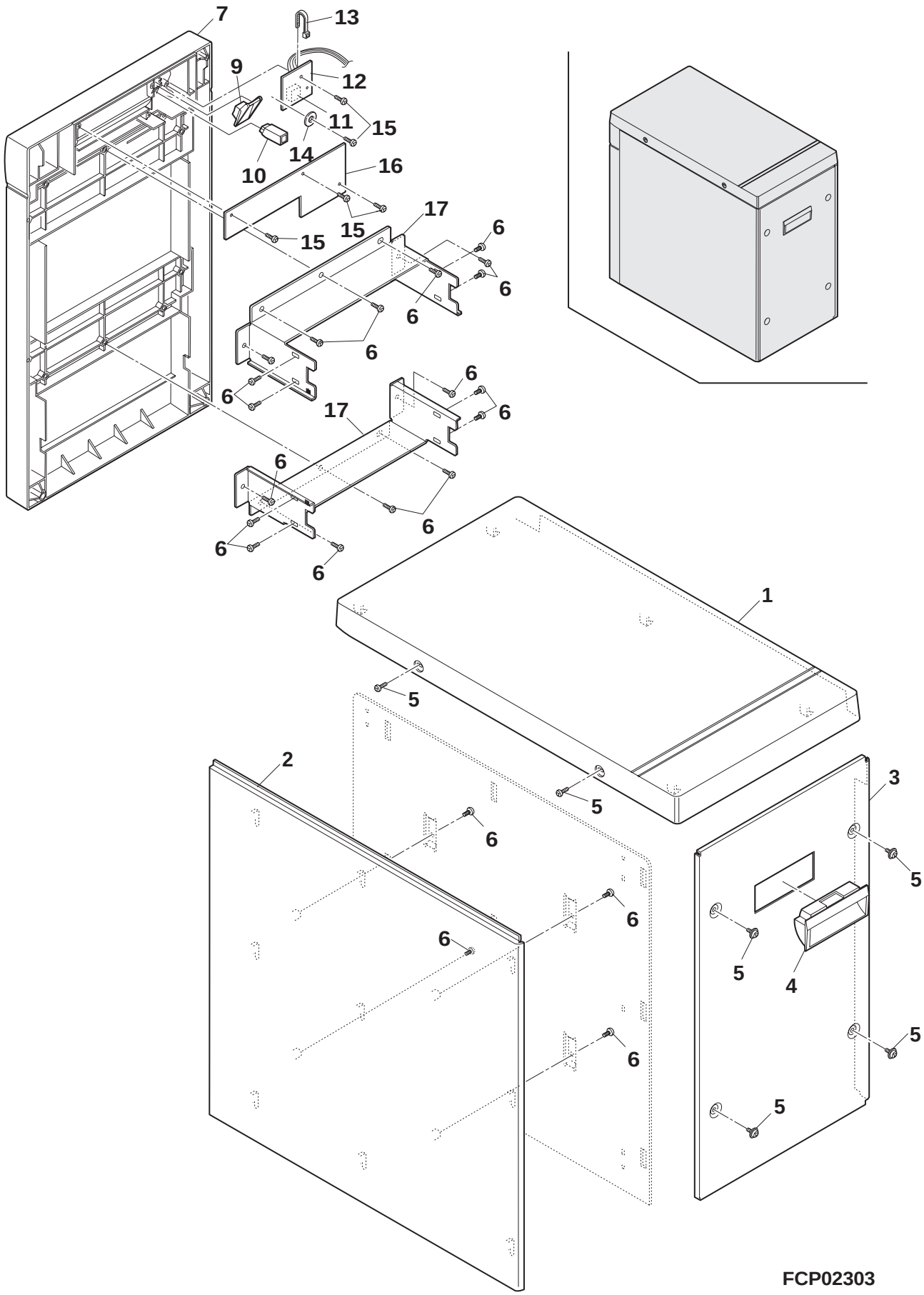

FCP02303

66 Large capacity tray unit·· Exteriors

NO.	PARTS CODE	COMPATIBLE	PRICE RANK	NEW MARK	PART RANK	DESCRIPTION	TR NO.	VALID
1	0EUCAB0401E//		BE		D	3000 Tray cabinet upper		
2	0EUCAB0402E//		BH		D	3000 Tray cabinet Right		
3	0EUCÕV0402E//		BC		D	3000 Tray cabinet rear		
4	0EUHND0401E//		AM		C	LCC handle		
5	XBBSE40P08000		AA		C	Screw (4×8)		
6	LX-BZ0527FCZZ		AA		C	Screw (4×8)		
7	0EUCÕV0401E//		BF		C	3000 Tray cover (Japan only)		
	0EUCÕV0401E//		BF		C	3000 Tray cover (Export)		
9	JBTN-0162FCZZ		AD		C	Switch key		
10	PFiLZ0196FCZZ		AE		B	Smoke filter		
11	QSW-P0461FCZZ		AD		B	Push switch		
12	CPWBF0984FC31		AQ		E	Tray switch PWB		
13	LBNDJ1002HCZZ		AA		C	Wire band		
14	XWHSD40-08100		AA		C	Washer (ϕ4)		
15	XBPSD30P08000		AA		C	Screw (3×8)		
16	0EUPLT0407E//		AG		C	3000 PWB protect cover		
17	0EUBRC0401E//		AS		C	3000 Tray cover bracket		

67 Large capacity tray unit·· Frame 1

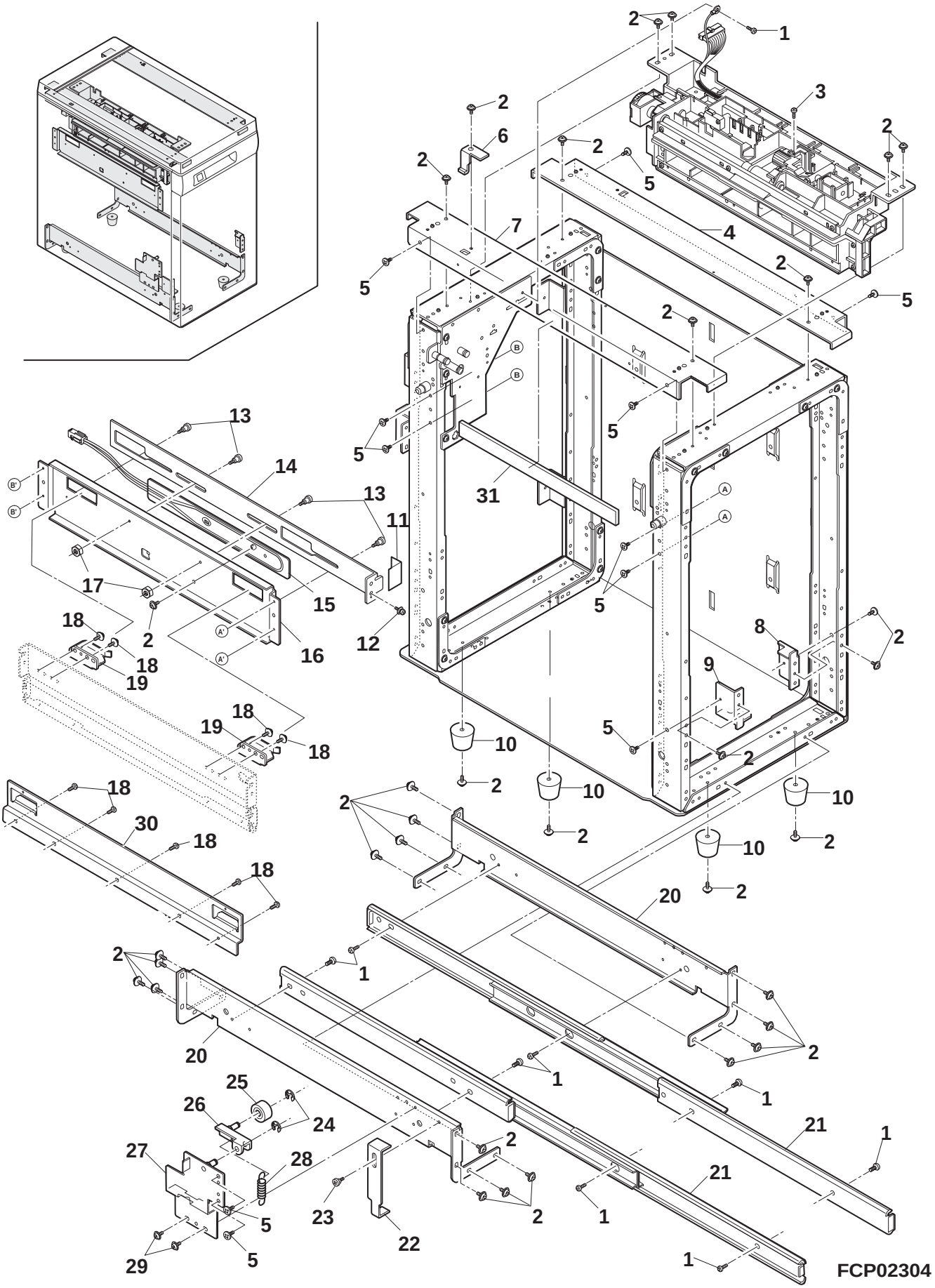

67 Large capacity tray unit·· Frame 1

NO.	PARTS CODE	COMPATIBLE	PRICE RANK	NEW MARK	PART RANK	DESCRIPTION	TR NO.	VALID
1	XBBSD40P06000		AA		C	Screw (4×6)		
2	LX-BZ0527FCZZ		AA		C	Screw (4×8)		
3	XBBSD30P06000		AA		C	Screw (3×6)		
4	0EUANG0413E//		AU		C	Joint stay 3000 R		
5	LX-BZ0293FCZZ		AA		C	Screw (4×8)		
6	LSTPF0282FCZZ		AE		C	Tray rail stopper DSK		
7	0EUANG0414E//		AU		C	Joint stay 3000 L		
8	0EUANG0415E//		AK		C	Stopper R		
9	0EUANG0416E//		AK		C	Stopper L		
10	GLEGG0045FCZZ		AC		C	Support (GC5)		
11	0EULAB0401E//		AG		C	Handle label		
12	LX-BZ0148FCZZ		AA		C	Screw (4×10)(Blue)		
13	LX-BZ0340FCZZ		AB		C	Screw		
14	0EUANG0406E//		AS		C	Side fixing plate		
15	RHETP0056FCZZ		AW		B	Dry heater 1 (Japan only)		
16	0EUANG0411E//		AV		C	Joint stay 3000 C		
17	XNESD40-32000		AA		C	Nut (φ4)		
18	XHBSE40P08000		AA		C	Screw (4×8)		
19	LPLTM4805FCZZ		AF		C	LCC fixing plate upper		
20	0EUSTY0404E//		AX		C	3000 Joint plate		
21	MSLi-0128FCZZ		BA		C	Slider 3000		
22	0EUANG0409E//		AF		C	Lock release plate		
23	LX-BZ0140FCZZ		AB		C	Screw		
24	XRESP70-08000		AA		C	E type ring (7mm)		
25	NBRGY0420FCZZ		AM		B	Tray lock roller		
26	CPLTM1510FC05		AF		C	Tray lock tension plate		
27	0EUANG0412E01		AR		C	Joint lock plate ass'y		
28	0EUSPR0402E//		AG		C	Tray lock spring		
29	LX-BZ0618FCZZ		AA		C	Screw (4×4)		
30	LPLTM4806FCZZ		AQ		C	LCC fixing plate lower		
31	0EUSEL0401E//		AF		C	Stay 3000 seal		

68 Large capacity tray unit·· Frame 2

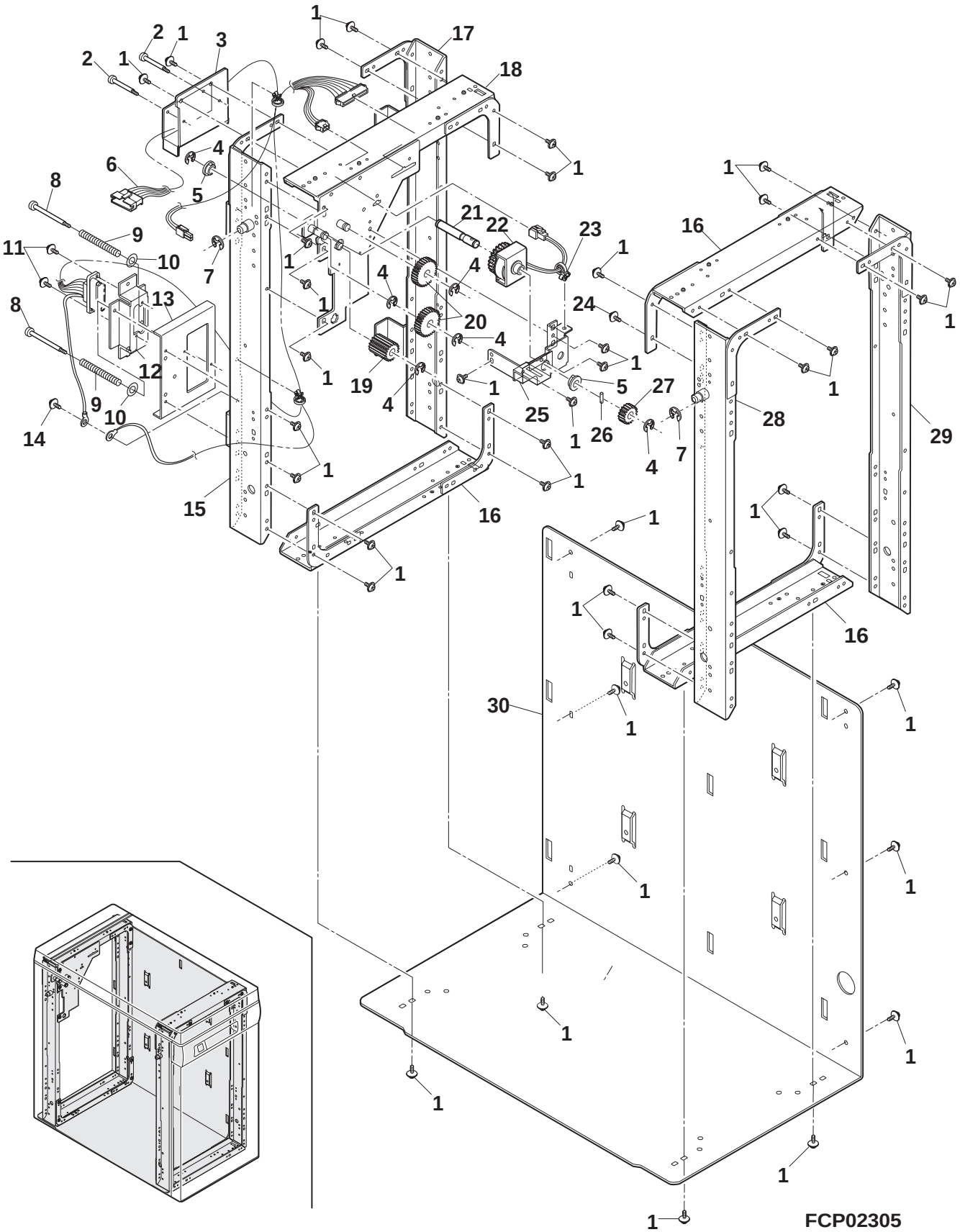

68 Large capacity tray unit·· Frame 2

NO.	PARTS CODE	COMPATIBLE	PRICE RANK	NEW MARK	PART RANK	DESCRIPTION	TR NO.	VALID
1	LX-BZ0527FCZZ		AA		C	Screw (4×8)		
2	LX-BZ0016FCZZ		AA		C	Screw		
3	0EUANG0408E//		AL		C	Harness fixing plate		
4	XRESP70-08000		AA		C	E type ring (7mm)		
5	NBRGC0504FCZZ		AC		C	Bearing (F8-12-5 16X)		
6	0EUHAi0403E//		BD		C	Body interface harness (Japan only)		
	0EUHAi0403E11		BD		C	Body interface harness (Export)		
7	XRESP90-08000		AA		C	E type ring (9mm)		
8	LX-BZ0681FCZZ		AB		C	Screw		
9	MSPRC2069FCZZ		AB		C	Drawer fixing spring		
10	LX-WZ0135FCZZ		AA		C	Washer		
11	XBPSD30P10KS0		AB		C	Screw (3×10KS)		
12	LPLTM4411FCZZ		AH		C	2000 body housing		
13	0EUANG0404E//		AM		C	Connector fixing plate		
14	XBBSD40P06000		AA		C	Screw (4×6)		
15	0EUSTY0409E01		AZ		C	Pipe R 3000 stay L		
16	0EUSTY0406E01		AX		C	Stay 3000 L2		
17	0EUSTY0410E01		AY		C	Pipe R 3000 stay R		
18	0EUSTY0405E01		BA		C	Stay 3000 L1		
19	CGERH0267FC01		AF		C	DV joint gear 19T		
20	CGERH0432FC01		AD		C	MM gear 30T		
21	0EUSFT0404E//		AM		C	Clutch shaft		
22	PCLC-0248FCZZ		AX		B	Spring clutch		
23	LBNDJ0043FCZZ		AA		C	Snap band (SG-130)		
24	LX-BZ0293FCZZ		AA		C	Screw (4×8)		
25	0EUANG0405E//		AL		C	Spring clutch fixing plate		
26	LPiNS0096FCZZ		AB		C	Pin (φ3-12)		
27	NGERH0861FCZZ		AB		C	Paper feed roller gear 18T		
28	0EUSTY0407E01		AZ		C	Pipe F 3000 stay L		
29	0EUSTY0408E01		AY		C	Pipe F 3000 stay R		
30	0EUFRM0403E//		BC		C	Joint plate		

69 Large capacity tray unit·· Frame 3

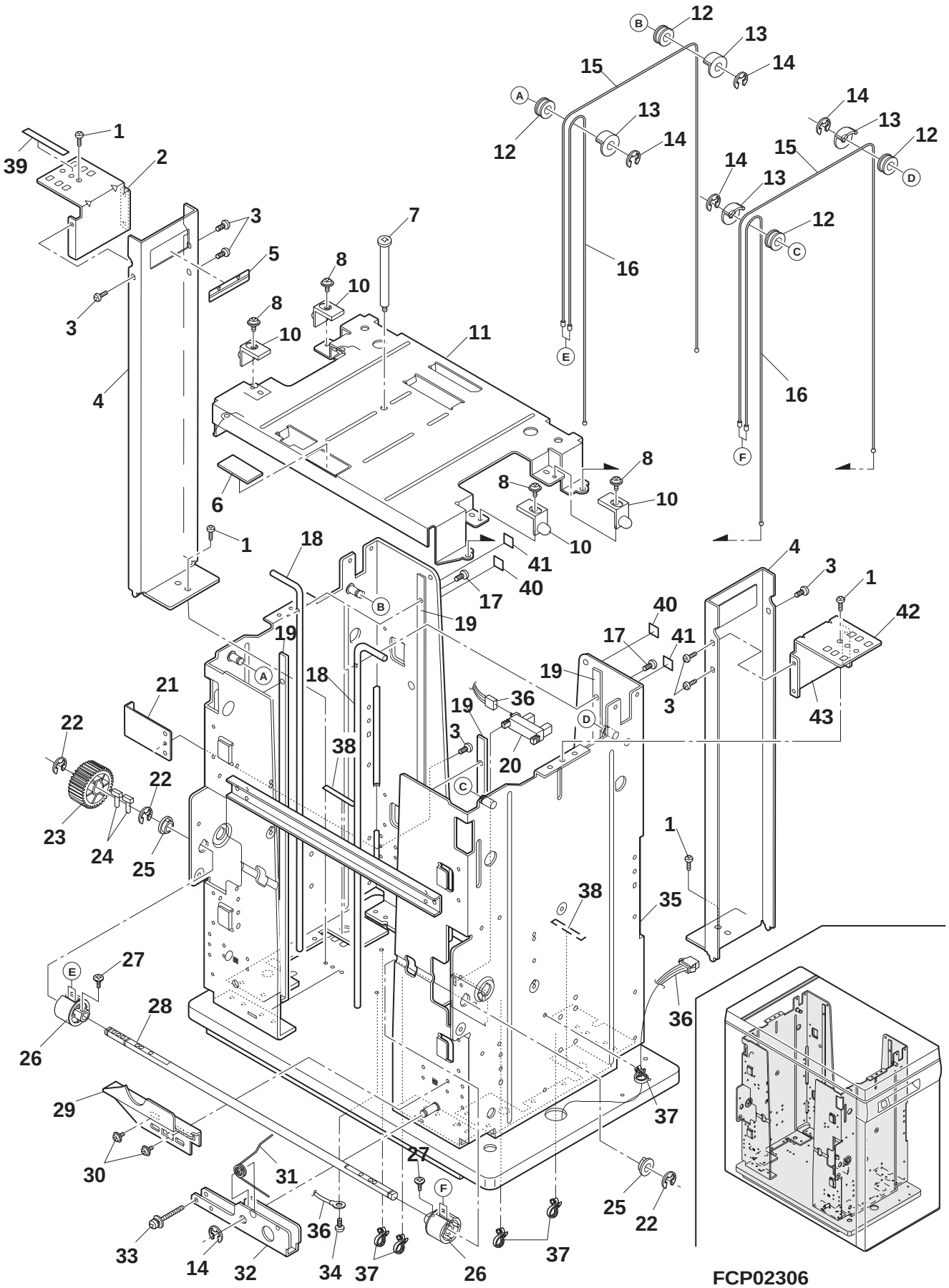

69 Large capacity tray unit·· Frame 3

NO.	PARTS CODE	COMPATIBLE	PRICE RANK	NEW MARK	PART RANK	DESCRIPTION	TR NO.	VALID
1	LX-BZ0148FCZZ		AA		C	Screw (4×10)(Blue)		
2	0EUGiD0401EZ1		AL	N	C	SG support plate 3000 (U.S.A.,CANADA)		
	0EUGiD0401E//		AN		C	SG support plate 3000 (Except U.S.A.,CANADA)		
3	LX-BZ0293FCZZ		AA		C	Screw (4×8)		
4	0EUPLT0408EZ1		AU	N	C	SG 3000 AB plate (U.S.A.,CANADA)		
	0EUPLT0408E//		AX		C	SG 3000 AB plate (Except U.S.A.,CANADA)		
5	TLABZ2424FCZZ		AB		C	Indicator label		
6	PSHEZ3138FCZZ		AC		C	Paper fixing base sheet		
7	LX-BZ0682FCZZ		AD		C	Screw		
8	LX-BZ3004SC0M		AA		C	Screw (3×4)		
10	PGiDM1768FCZZ		AD		C	Slide guide		
11	0EUTRY0401EZ1		BC	N	D	3000 tray (U.S.A.,CANADA)		
	0EUTRY0401E//		BE		D	3000 tray (Except U.S.A.,CANADA)		
12	NPLYZ0280FCZZ		AC		C	Wire pulley		
13	PCLR-0381FCZZ		AB		C	Wire fixing collar		
14	XRESP70-08000		AA		C	E type ring (7mm)		
15	0EUWiR0402E//		AU		C	3000 Wire B		
16	0EUWiR0401E//		AU		C	3000 Wire A		
17	XBPS230P10KS0		AA		C	Screw (3×10KS)(Blue)(Japan, AB series)		
18	0EUSFT0406E//		AZ		C	Rear plate shaft (Japan, AB series)		
19	0EUGiD0403E//		AN		C	Paper control guide		
20	VHPEESX461P11		AS		B	Photo transistor (EESX461P11)		
21	0EUPLT0409E//		AF		C	Stopper TRY		
22	XRESP50-06000		AA		C	E type ring (5mm)		
23	NGERH1215FCZZ		AF		C	30T gear		
24	LPiNS0263FCZZ		AD		C	T type pin		
25	NBRGC0504FCZZ		AC		C	Bearing (F8-12-5 16X)		
26	0EUPLY0401E//		AG		C	Winder pulley		
27	LX-BZ7026XCZZ		AA		C	Screw		
28	NSFTZ1937FCZZ		AW		C	Winder shaft		
29	0EUANG0407E//		AH		C	Tray lock plate 3000		
30	LX-BZ0618FCZZ		AA		C	Screw (4×4)		
31	MSPRC1651FCZZ		AC		C	PC pressure spring R		
32	LSTPF0290FCZZ		AF		C	Stopper		
33	LX-BZ0709FCZZ		AC		C	Lock arm screw		
34	XBBSD40P06000		AA		C	Screw (4×6)		
35	0EUTRY0402E02		BU	N	D	Body 3000 (U.S.A.,CANADA)		
	0EUTRY0402E01		BW		D	Body 3000 (Except U.S.A.,CANADA)		
36	0EUHAi0401E//		BA		C	3000 Tray harness		
37	LBNDJ0043FCZZ		AA		C	Snap band (SG-130)		
38	TLABZ3435FCZZ		AD		C	Size label B (Japan only)		
39	TLABZ3434FCZZ		AB		C	Size label A (Japan only)		
40	TLABZ3809FCZZ		AD		C	B5 size label (Japan only)		
41	TLABZ3808FCZZ		AD		C	A4 size label (Japan only)		
42	0EUPLT0417EZ1		AH	N	C	SG support plate 3000B (U.S.A.,CANADA)		
	0EUPLT0417E//		AH	N	C	SG support plate 3000B (Except U.S.A.,CANADA)		
43	0EUPLT0416EZ1		AL	N	C	SG support plate 3000A (U.S.A.,CANADA)		
	0EUPLT0416E//		AL	N	C	SG support plate 3000A (Except U.S.A.,CANADA)		

70 Large capacity tray unit·· Paper feeding section

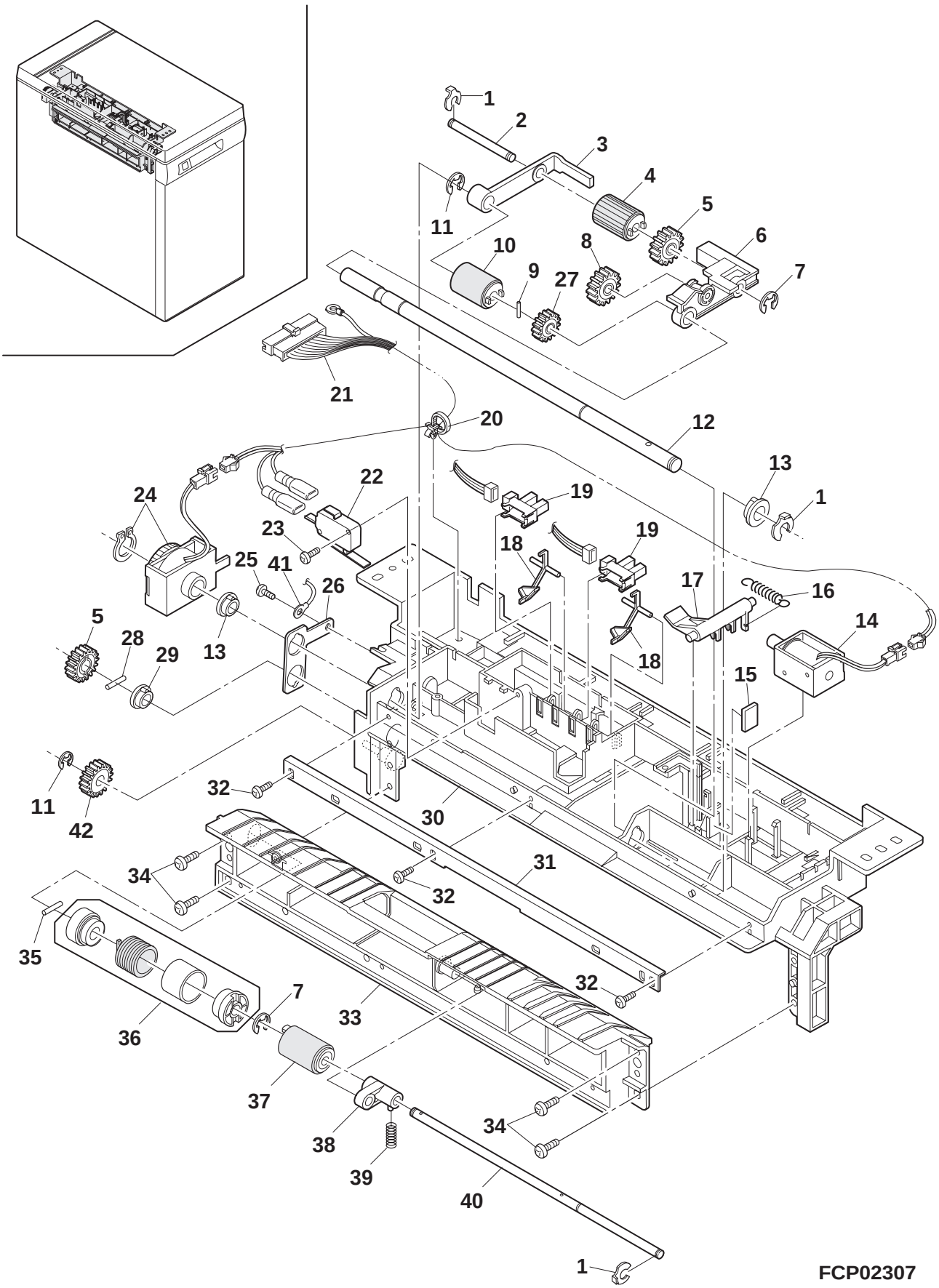

70 Large capacity tray unit·· Paper feeding section

NO.	PARTS CODE	COMPATIBLE	PRICE RANK	NEW MARK	PART RANK	DESCRIPTION	TR NO.	VALID
1	LSTPP0279FCZZ		AB		C	Stopper		
2	NSFTZ1766FCZZ		AD		C	Pick up roller shaft		
3	MLEVP0589FCZZ		AC		C	Pick up roller lever L		
4	NRŌLR1114FCZZ		AL		C	Pick up roller		
5	NGERH0863FCZZ		AB		C	Pick up roller gear 18T		
6	MLEVP0586FCZZ		AC		C	Pick up roller lever R		
7	XRESP50-06000		AA		C	E type ring (5mm)		
8	NGERH0862FCZZ		AB		C	Idle gear 20T		
9	LPiNS0096FCZZ		AB		C	Pin (φ3-12)		
10	NRŌLR1049FCZZ		AT		C	Paper feeding roller		
11	XRESP70-08000		AA		C	E type ring (7mm)		
12	0EUSFT0405E//		AT		C	Paper feeding roller shaft 3000		
13	NBRGC0167FCZZ		AB		C	PF bearing (B-F6-27)		
14	RPLU-0278FCZZ		AQ		B	Pick up solenoid		
15	0EUCUS0401E//		AC		C	Solenoid protect cushion 3000		
16	MSPRC1942FCZZ		AB		C	Solenoid lever spring		
17	MLEVP0588FCZZ		AB		C	Solenoid lever		
18	MLEVP0601FCZZ		AC		C	Sensor lever		
19	VHPGP1A71A1-1		AG		B	Photo sensor (GP1A71A1)		
20	LBNDJ0043FCZZ		AA		C	Snap band (SG-130)		
21	0EUHAi0402E//		AT		C	CS interface harness		
22	0EUSWM0401E//		AQ		B	Lock switch		
23	XBBSD30P14000		AA		C	Screw (3×14)		
24	PCLC-0248FCZZ		AX		B	Spring clutch		
25	XBBSD30P04000		AA		C	Screw (3×4)		
26	0EUSPR0401E//		AF		C	Earth spring 3000		
27	NGERH0861FCZZ		AB		C	Paper feed roller gear 18T		
28	LPiNS0134FCZZ		AB		C	Pin (φ2-12)		
29	NBRGC0457FCZZ		AD		C	Bearing (B-F6-340K)		
30	0EUBRC0402E01		AY		C	Main bracket 3000 ass'y		
31	0EUPLT0411E//		AH		C	Reinforce plate		
32	XEBSD30P08000		AA		C	Screw (3×8)		
33	0EUGiD0402E//		AS		C	Lower guide 3000		
34	XEPSD40P10000		AA		C	Screw (4×10)		
35	XPSSJ20-15000		AA		C	Spring pin (φ2-15)		
36	CCLR-0373FC35		AT	N	E	Limitor unit		
37	NRŌLR1093FCZZ		AN		C	Roller		
38	0EULEV0401E01		AH		C	Roller lever ass'y		
39	MSPRC2344FCZZ		AC		C	Roller lever spring		
40	NSFTZ1765FCZZ		AH		C	Roller shaft		
41	0EUHAi0405E//		AF		C	PF roller earth wire		
42	0EUGER0401E//		AT		C	Brake gear		

71 Large capacity tray unit·· Drive section

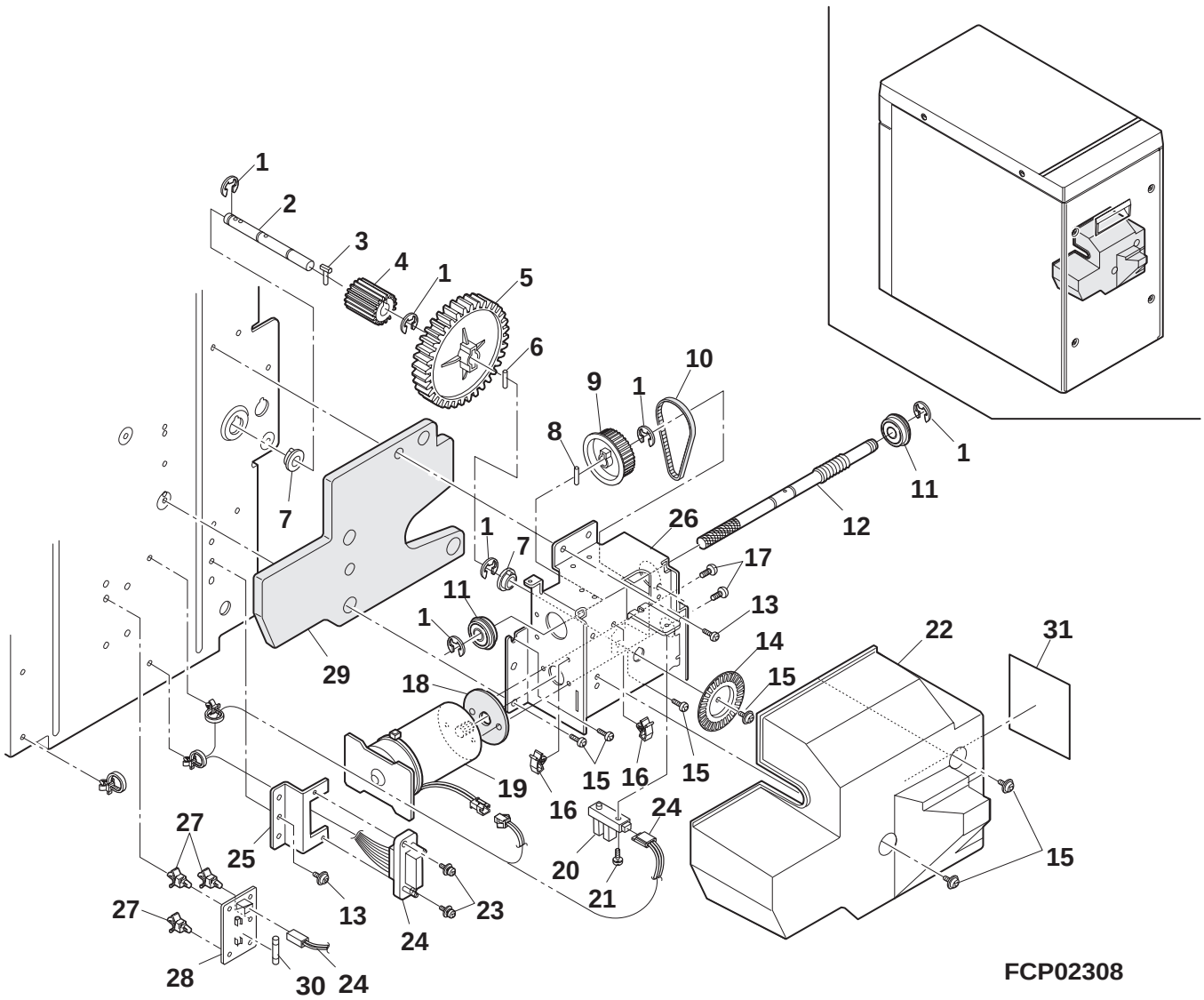

71 Large capacity tray unit·· Drive section

NO.	PARTS CODE	COMPATIBLE	PRICE RANK	NEW MARK	PART RANK	DESCRIPTION	TR NO.	VALID
1	XRESP70-08000		AA		C	E type ring (7mm)		
2	NSFTZ1938FCZZ		AM		C	Lift motor output shaft		
3	LPiNS0263FCZZ		AD		C	T type pin		
4	NGERH0955FCZZ		AF		C	Gear 20T		
5	NGERH0933FCZZ		AF		C	Worm wheel gear 86T		
6	LPiNS0157FCZZ		AB		C	Pin (φ3-14)		
7	NBRGC0504FCZZ		AC		C	Bearing (F8-12-5 16X)		
8	LPiNS0155FCZZ		AA		C	Pin (φ3-10)		
9	NPLYZ0169FCZZ		AE		C	48T pulley		
10	NBLTH0215FCZZ		AH		B	Belt (MXL70-4.8)		
11	NBRGY0131FCZZ		AM		B	Bearing (with φ22 E ring)		
12	NGERW1072FCZZ		AY		C	Worm gear 3000		
13	LX-BZ0618FCZZ		AA		C	Screw (4×4)		
14	LPLTP2926FCZZ		AF		C	M sensor plate		
15	LX-BZ0527FCZZ		AA		C	Screw (4×8)		
16	LHLDW1013FCZZ		AB		C	Wire holder (YMC-10)		
17	LX-BZ3008SC0M		AA		C	Screw (3×8)		
18	PGUMS0246FCZZ		AT		C	Motor protection rubber		
19	RMOTV0730FCZ1		BB		B	Tray lift motor		
20	VHPGP1A22LC-1		AK		B	Photo sensor (GP1A22LC)(MHPD)		
21	XBPSD40P12K00		AA		C	Screw (4×12K)		
22	PCOVP1162FCZZ		AP		C	Motor cover		
23	XBPSD30P12KS0		AA		C	Screw (3×12KS)		
24	0EUHAi0401E//		BA		C	3000 Tray harness		
25	LPLTM4336FCZZ		AF		C	Drawer fixing plate		
26	LPLTM4342FCZZ		AU		C	Lift motor fixing plate A		
27	LBSHZ2029SCZZ		AB		C	PWB spacer		
28	0EUPWB0401E01		AR		E	Fuse PWB		
29	PSHEP3495FCZZ		AM		C	Motor protection sheet		
⚠ 30	QFS-A0331QCZZ		AE		A	Fuse (1.25A 125V)(Japan,U.S.A.,CANADA)		
⚠ 30	QFS-D4341CCZZ		AE		A	Fuse (1A 250V)(Other countries)		
31	PSHEP3342FCZZ		AD		C	30T gear cover sheet		

72 Large capacity tray unit·· Packing material & Accessories

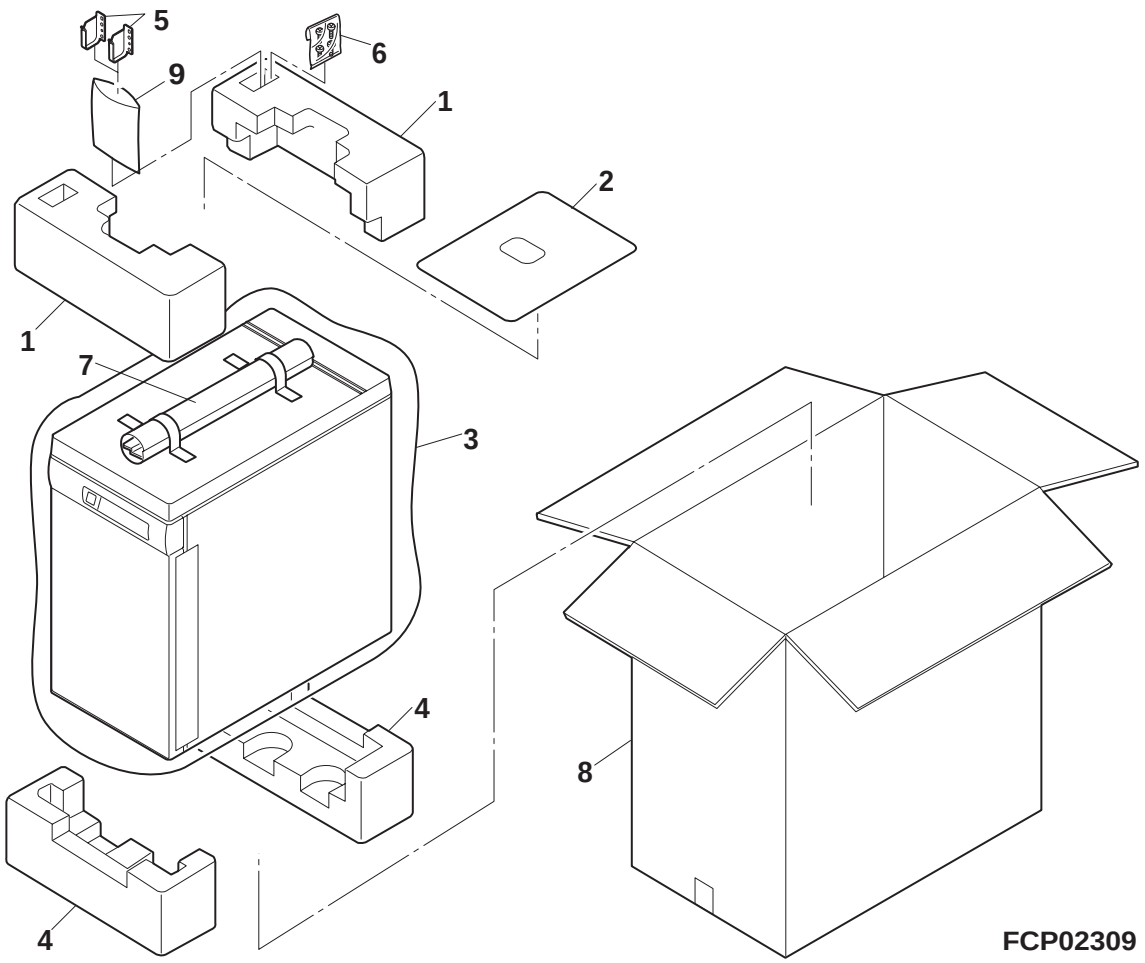

72 Large capacity tray unit·· Packing material & Accessories

NO.	PARTS CODE	COMPATIBLE	PRICE RANK	NEW MARK	PART RANK	DESCRIPTION	TR NO.	VALID
1	SPAKA5230FCZZ		AQ		D	Packing cushion B		
2	TCADZ1194FCZZ		AL		D	Card (Japan only)		
	TCADZ1195FCZZ		AH		D	Card (U,Kingdom,Australia)		
	TCADZ1323FCZZ		AH		D	Card (U.S.A. only)		
	TCADZ1324FCZZ		AN		D	Card (CANADA only)		
	TCADZ1329FCZZ		AN		D	Card (China only)		
	TCADZ1196FCZZ		AP		D	Card (Other countries)		
3	UBAGF0039FCZZ		AG		D	Body vinyl bag		
4	SPAKA5229FCZZ		AQ		D	Packing cushion A		
5	LPLTM4805FCZZ		AF		C	LCC fixing plate upper		
6	SSAKA0006UCZZ		AA		D	Vinyl bag for screw (50mm×60mm)		
	XHBSE40P08000		AA		C	Screw (4×8)		
7	SPAKA5231FCZZ		AE		D	Protect sheet A (Except U.S.A.,CANADA)		
	LPLTM4806FCZZ		AQ		C	LCC fixing plate lower (Except U.S.A.,CANADA)		
8	SPAKC5228FCZZ		AZ		D	Packing case (Japan only)		
	SPAKC5228FC12		BA		D	Packing case (U.S.A.,CANADA)		
	SPAKC5228FC13		BA		D	Packing case (China only)		
	SPAKC5228FC11		BA		D	Packing case (Other countries)		
9	SSAKA2011KCZZ		AA		D	Vinyl bag (60×100mm)		
101	XWVSD40-05000		AA		C	Washer		
102	TLABH2646FCZZ		AB		C	Label		
103	LX-BZ0021FCZZ		AA		C	Screw		
104	LX-BZ0527FCZZ		AA		C	Screw (4×8)		
105	SPAKA5074FCZZ		AC		D	Packing cushion		